azbil

CM2-AVP300-2001

Smart Valve Positioner

300 Series

Model AVP300/AVP301/AVP302 (Integral Type)

200 Series

Model AVP200/AVP201/AVP202 (Remote Type)

User's Manual

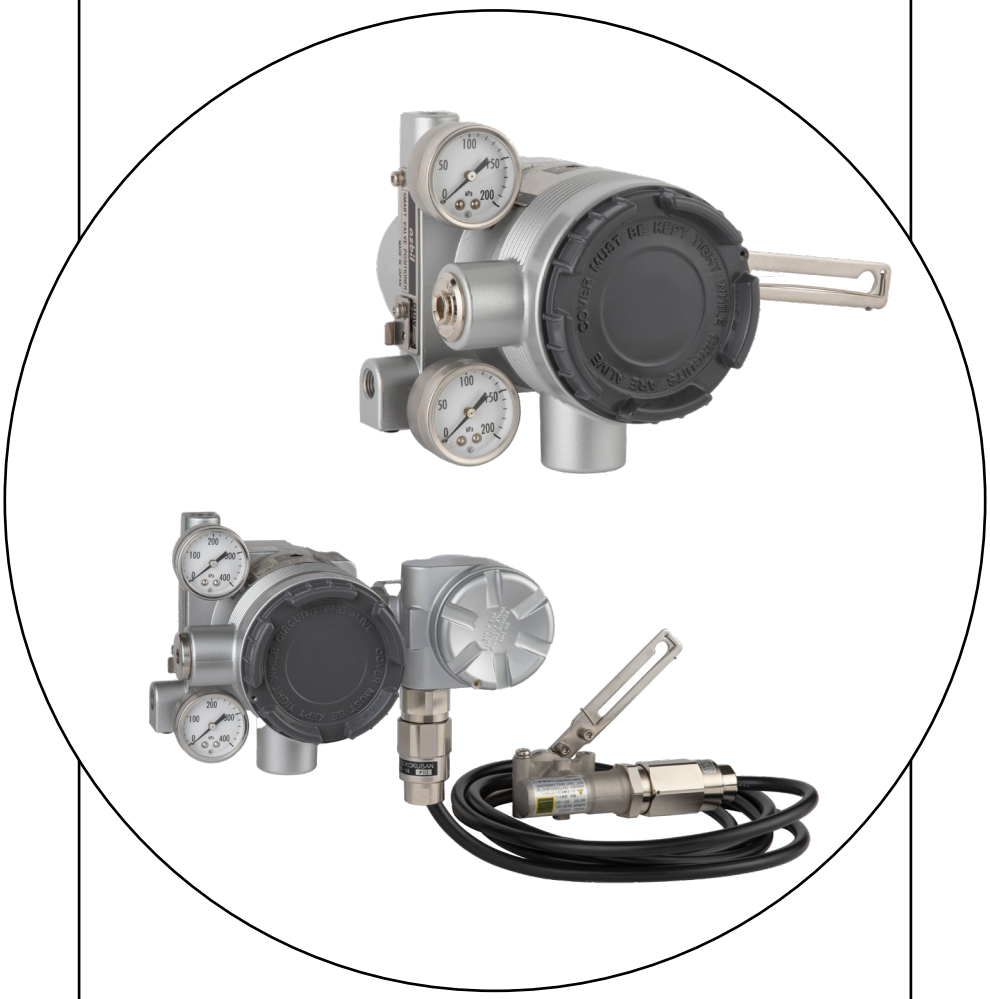

Azbil Corporation

azbil

NOTICE

- Make sure that this manual is available to the user.
- Reproduction or transmission of this manual, in whole or in part, is prohibited.
- The descriptions in this manual are subject to change without notice.
- It is our hope that this manual is complete and accurate, but in the event that there is content which is incomplete or whose accuracy is in question, please contact us.
- Please understand that we cannot in some cases accept responsibility for the results of use of this equipment by the customer.
- HART® is a registered trademark of FieldComm Group.
- DE® and the DE protocol® are registered trademarks of Honeywell International, Inc. in the United States.

©1998–2025 Azbil Corporation. All Rights Reserved.

Introduction

Introduction

Thank you for purchasing an Azbil Corporation Smart Valve Positioner 200/300 Series. Smart Valve Positioner 200/300 Series (the devices) can be connected to a 4 to 20 mA signal line. Since all adjustments can be performed electrically using Field Communication Software(Model CFS100), any desired relationship can be set between the input signal and the position of the control valve. Split range and other special settings are also easy to specify. This manual describes the use of the Smart Valve Positioner. Use this manual to get the most from the features of the device.

Safety precautions

Symbols

These safety precautions are intended to help you to use the product safely and correctly, and to prevent injury to yourself or others as well as damage to property. Be sure to follow all safety precautions.

This manual makes use of a variety of symbols. The symbols and their meanings are as follows. Gain a good understanding of this information before reading the main text of this manual.

⚠ **Warning**	Cases in which it is conceivable that dangerous situations might arise in which the user of the product could be seriously or fatally injured if the product is misused.
⚠ **Caution**	Cases in which it is conceivable that a dangerous situation might arise in which the user of the product could sustain minor injuries, or physical damage could occur, if the product is misused.

Examples of visual indicators

⚠	This indicates a warning or caution that the user should be aware of during use.
⃠	This indicates a prohibited action.
❗	This indicates an instruction that the user should be sure to carry out.

Cautions to ensure safe operation

⚠ Warning	
	Do not perform wiring work, turn on the electricity, etc., when your hands are wet. There is a risk of electric shock. Perform this work with the power supply turned off, and with dry or gloved hands.
	When wiring in a hazardous area, work according to the methods prescribed by the guidelines for the hazardous area.
	For flameproof explosion-proof specifications, do not under any circumstances open the cover during operation (when powered up).

⚠ Caution	
	After installing the device, do not place your body weight on it, use it as a scaffold, etc. There is a risk that it could fall over.
	Do not touch the device unnecessarily while it is in operation. Depending on the environment in which the device is used, there is a danger that the surface of the device may be very hot or very cold.
	When opening the cover of the terminal box, be careful of the edges of the cover, the threads of the screws on the main unit, etc. There is a possibility of injury.
	Use a DC power supply that has overload protection. An overload can cause the emission of smoke and fire.
	Bringing tools and the like into contact with the glass portion of the display can cause damage or injury. Exercise sufficient caution. In addition, be sure to wear safety glasses.
	As this product is extremely heavy, watch your footing, and be sure to wear safety shoes.
	When the device is in operation, do not touch moving parts such as the feedback lever. Your hand may become caught, resulting in injury.
	Supply power correctly based on the specifications. An incorrect power input can damage the instrument.
	When working in a high-temperature or low-temperature environment, wear gloves and other protective equipment.
	Do not bring magnets or magnetic screwdrivers near the device. There is a possibility that the control valve will move in response.

Cautions to Disposal of Electrical and Electronic Equipment

Disposal of Electrical and Electronic Equipment (for Environmental Protection)
This is an industrial product subject to the WEEE Directive.
Do not dispose of electrical and electronic equipment in the same way as household waste.
Old products contain valuable raw materials and must be returned to an authorized collection point for correct disposal or recycling.

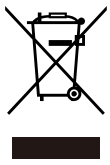

Basic use

Basic model number structure

Model AVP __ 0 _

- 0: No transmission
- 1: With travel transmission (4 to 20 mA DC or DE transmission)
- 2: HART protocol communication

- 0: Fixed

- 2: Remote type
- 3: Integral type

Positioner and Actuator Types

Actuator Type \ Positioner Type	**Model AVP300/301/302** (Integral Type)	**Model AVP200/201/202** (Remote Type)
Single-acting linear diaphragm (Azbil Corporation actuator model numbers: PSA, HA, HK, VA, VR, RSA, GOM)	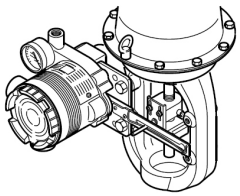 (See p. v.)	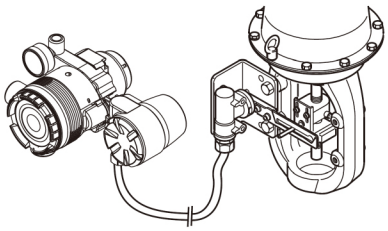 (See p. xiii.)
Double-acting linear cylinder (Azbil Corporation actuator model numbers: VP, SLOP, DAP)	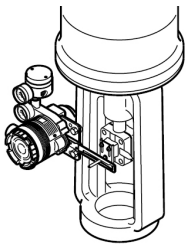 (See p. vii.)	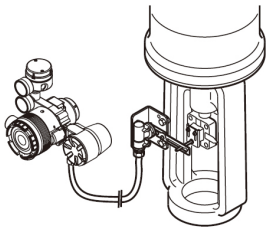 (See p. xvi.)
Single-acting rotary cylinder (actuator for ball valves and butterfly valves)	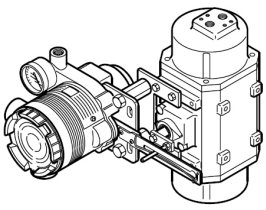 (See p. ix.)	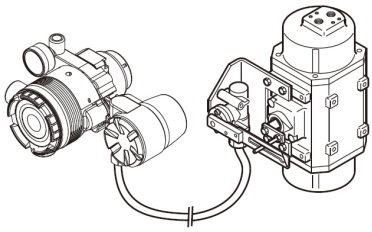 (See p. xix.)
Double-acting rotary cylinder (actuator for ball valves and butterfly valves)	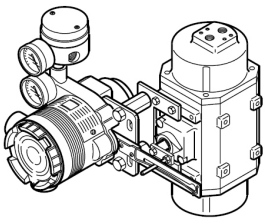 (See p. xi.)	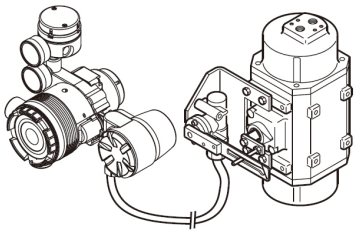 (See p. xxi.)

Combination of model AVP300/301/302 (integral type) and single-acting linear diaphragm actuator

1. Attachment of feedback lever

In order to minimize the risk of damage to the feedback lever while it is carried or transported, and to minimize the packaging as well, the feedback lever is detached from the body of the device when it is packed. As a result, the feedback lever must be attached to the body of the device prior to installation of the device.

The length of the feedback lever can if necessary be adjusted by attaching the extension lever between the feedback lever and the body of the device. Adjustment of the feedback lever length is determined based on the form of the actuator.

If the actuator type is specified when ordering, and the extension lever is included:	Attach the extension lever to the body of the device, and then attach the feedback lever.
If the actuator type is specified when ordering, and the extension lever is not included:	The extension lever is not necessary. Attach the feedback lever directly to the body of the device.
If the actuator type is not specified when ordering:	The extension lever will be included. Refer to the table below to determine, based on the actuator with which the device is equipped, whether or not the extension lever is necessary.

Manufacturer	Extension Lever	Actuator Type	Code
Azbil Corporation	No	PSA1, 2, PSK1	YS
		HA1	YA
		HA2, 3	YT
		HK1	YK
		VA1 to 3	YQ
	Yes	PSA3, 4	YQ
		PSA6	YL
		HA4	YN
		PSA7	Y8
		VA4 to 6	YL
		RSA1	YF
		RSA2	YU
		VR1	YV
		VR2, 3	YR
		VR3H	Y6
		GOM83S, 84S, 103S	YG
		GOM124S	YM
Motoyama	No	#240, #280, #330	TA, TD
	Yes	#400, #500S, #500L	TB, TE
		#650S, #650L	TC, TF
Masoneilan	No	#11, #13	MA, MB
	Yes	#15, #18	MC, MF
Nihon Koso	No	#270, #320	TA, TD
	Yes	#400, #500	TB, TE

When connecting an actuator other than those in the table, connect the device and the actuator, and then switch to manual mode and move the actuator slowly and ensure that the feedback lever does not interfere with the full stroke of the actuator.

If the feedback lever alone cannot cover a full stroke, attach the extension lever to it.

Attach the feedback lever securely, working from the front of the device, using the two included hexagon socket head bolts.

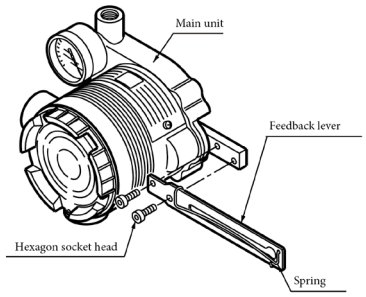

Attachment of Feedback Lever

Attach the extension lever securely, working from the front of the device, using the two included hexagon socket head bolts. Then, in the same way, attach the feedback lever securely, working from the back of the device. (The feedback lever can be attached from the front as well.)

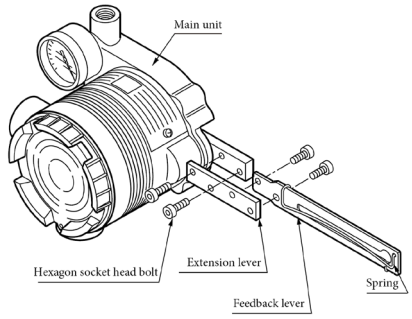

Attachment of Extension Lever and Feedback Lever

2. Attachment and installation

[1] Attachment to the actuator

Attach to the actuator with a mounting plate that is appropriate for the actuator.

[2] Adjustment of attachment positions

Procedure for adjustment of attachment positions

Step	Procedure
1	Set the A/M switch to manual operation. (See 5.2, "A/M Switch.")
2	Supply air, and adjust the actuator air pressure such that the actuator stem reaches the travel midpoint.
3	Adjust the actuator such that the feedback lever reaches a 90° angle to the device's central vertical axis. Depending on the actuator being used, adjustment may be performed by moving the device, or it may be performed by moving a pin.
4	Set the A/M switch to automatic operation. (See 5.2, "A/M Switch.")

Note: The accuracy specifications can be satisfied by making the attachment angle 90° ±2°.

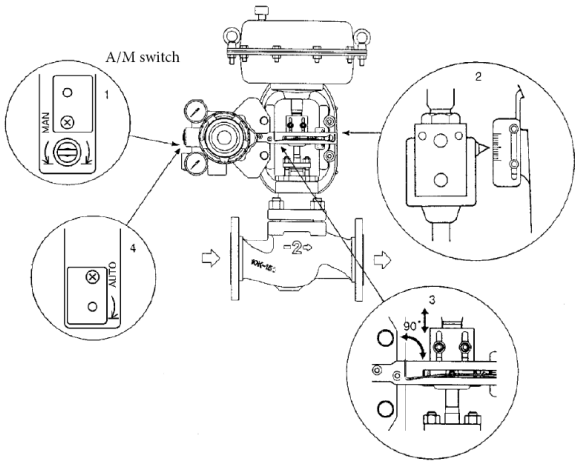

Adjustment of Attachment Positions

3. Air piping and electric wiring connection

Connect the air piping and electrical wiring.
For details, see 2.2, "Installation Method," in this document.

4. Auto-setup

(1) Set the input signal to 18 ±1 mA.

(2) Using a flat-blade screwdriver, turn the external zero/span adjustment switch in the upper part of the case 90° in the UP direction (the DOWN direction for Azbil Corporation's VR and RSA actuators for VFR type control valves), and hold that position for three seconds.

Note: For reverse close (when the valve's fully closed position is on top), set the valve action to reverse close beforehand. See 4.4.3, "Valve system"

(3) The valve will automatically start to move, and will stop in about 3 to 4 minutes.

(4) When it stops, adjust it to a position that fits the input signal.

(5) After that, check whether it has been adjusted correctly.

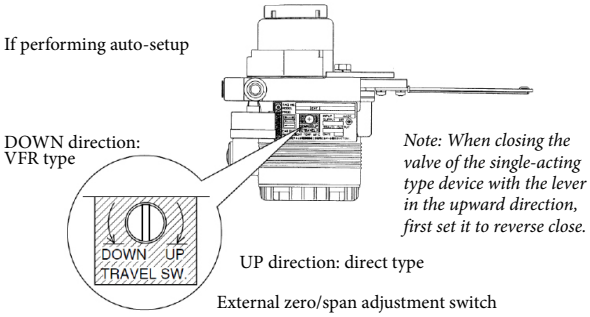

- Auto-setup can be performed with Field Communication Software(Model CFS100) as well.

⚠ Warning

When auto-setup is performed, the valve moves from fully closed to fully open, so there is a danger of, for example, getting your hand caught or affecting the process.
Before performing auto-setup, move away from the valve, and confirm that the process is safe.

Check the span point and perform span adjustment.

(1) Set the input signal to the span point (URV). (Zero adjustment can be performed if the input signal is adjusted to the zero point, and span adjustment can be performed if the input signal is adjusted to the span point.)

(2) Using a flat-blade screwdriver, turn the external zero span adjustment switch on the upper part of the case UP (clockwise) to cause the valve to move such that the feedback lever rises upward, or turn it DOWN (counterclockwise) to cause the valve to move such that the feedback lever drops downward.

5. Operation confirmation

Vary the input signal, and check the zero point and span point.

6. If suitable adjustment was not accomplished

[1] If auto-setup does not operate

- Check whether the input signal is 18 mA ± 1 mA.
- Check whether the A/M switch is set to automatic. If it is set to manual, switch it to auto. See 5.2, "A/M Switch," in this document for information on operating procedures.
- Check the duty value of the electro-pneumatic module. Regarding the confirmation method, see "EPM (electro-pneumatic module) operation confirmation procedure" on page 3-9 in this document.
- Check whether the electronics module (terminal block) is installed correctly in the case on the body of the device.

[2] If hunting occurs

- Using the setup device, either change the actuator size (Param) or individually set the valve position control PID. Regarding the configuration method, see 4.4.4, "Control configuration," below.

[3] If the zero point floats or span adjustment cannot be performed

Referring to Table 3-1, "Integral type setting," in 3.1, "Auto-setup," in this document, check whether valve action is configured correctly. If not, it will be necessary to change the valve action (the direct/reverse setting). Referring to 4.4.3, "Valve system," in this document, configure the valve action correctly.

[4] If linearity characteristic is poor

- Check whether, when the attachment position of the feedback lever is the 50 % opening position, it is attached horizontally. If not, refer to 2.2, "Installation Method," in this document and correctly attach the feedback lever.
- Check the flow rate characteristics data. If equal %, quick open, or the like has been specified, and these are fundamentally unnecessary, refer to 4.4.6, "Flow Type," in this document and change this setting to linear.

Combination of model AVP300/301/302 (integral type) and double-acting linear cylinder actuator

1. Attachment of feedback lever

In order to minimize the risk of damage to the feedback lever while it is carried or transported, and to minimize the packaging as well, the feedback lever is detached from the body of the device when it is packed. As a result, the feedback lever must be attached to the body of the device prior to installation of the device.

The length of the feedback lever can if necessary be adjusted by attaching the extension lever between the feedback lever and the body of the device. Adjustment of the feedback lever length is determined based on the form of the actuator.

If the actuator type is specified when ordering, and the extension lever is included:	Attach the extension lever to the body of the device, and then attach the feedback lever.
If the actuator type is specified when ordering, and the extension lever is not included:	The extension lever is not necessary. Attach the feedback lever directly to the body of the device.
If the actuator type is not specified when ordering:	The extension lever will be included. Refer to the table below to determine, based on the actuator with which the device is equipped, whether or not the extension lever is necessary.

Manufacturer	Extension Lever	Actuator Type	Code
Azbil Corporation	Yes	VP5, 6, 7	Y1
		SLOP560, 1000, 1000X	Y2
		SLOP1500, 1500X	Y3
		DAP560, 1000, 1000X	Y4
		DAP1500, 1500X	Y5

(SLOP type and DAP type are limited to products with stroke of 100 mm or less)

When connecting an actuator other than those in the table, connect the device and the actuator, and then, via manual operation, move the actuator slowly and ensure that the feedback lever does not interfere with a full stroke of the actuator.

If the feedback lever alone cannot cover a full stroke, attach the extension lever to it.

Attach the feedback lever securely, working from the front of the device, using the two included hexagon socket head bolts.

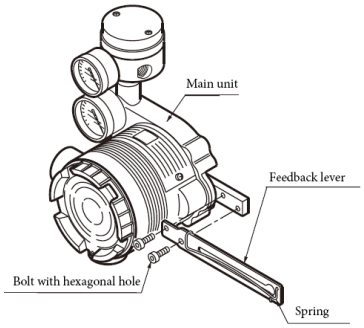

Attachment of Feedback Lever

Attach the extension lever securely, working from the front of the device, using the two included hexagon socket head bolts. Then, in the same way, attach the feedback lever securely, working from the back of the device. (The feedback lever can be attached from the front as well.)

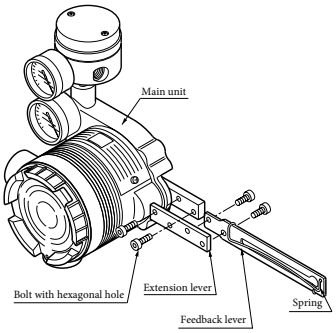

Attachment of Extension Lever and Feedback Lever

2. Attachment and installation

[1] Attachment to the actuator

Attach to the actuator with a mounting plate that is appropriate for the actuator.

[2] Adjustment of attachment positions

Procedure for adjustment of attachment positions

Step	Procedure
1	Using for example the manual handle of the actuator or manual operation via the external pressure regulator with filter, set the position to 50 %. (With a double-acting actuator, manual operation cannot be performed using the A/M switch.)
2	Adjust the actuator such that the feedback lever reaches a 90° angle to the device's central vertical axis. Depending on the actuator being used, adjustment may be performed by moving the device, or it may be performed by moving the pin.

Note: The accuracy specifications can be satisfied by making the attachment angle 90° ±2°.

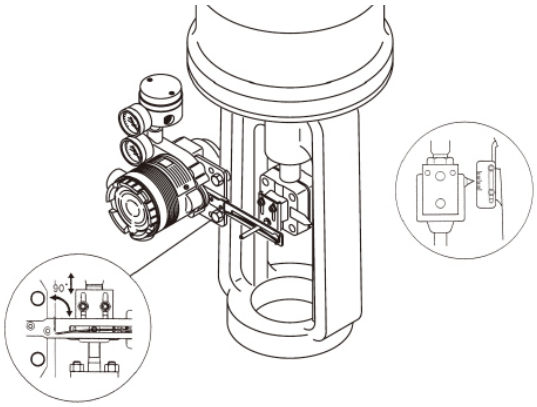

Adjustment of Attachment Positions

3. Air piping and electric wiring connection

- Air piping connection

(1) If control operation of control valve is direct operation
This refers to the state in which the valve moves in the closing direction as the input signal increases. Connect the reversing relay output OUT1 to the cylinder chamber that performs output in order to close the valve in response to increased pressure.

Next, connect the reversing relay output OUT2 to the cylinder chamber that performs output in order to open the valve in response to increased pressure.

(2) If control operation of control valve is reverse operation
This refers to the state in which the valve moves in the opening direction as the input signal increases. Connect the reversing relay output OUT2 to the cylinder chamber that performs output in order to close the valve in response to increased pressure.

Next, connect the reversing relay output OUT1 to the cylinder chamber that performs output in order to open the valve in response to increased pressure.

For details, see air piping connection and electric wiring connection in 1.3, "Description of Device Structure and Functions," and 2.2, "Installation Method," in this document.

4. Auto-setup

(1) Set the input signal to 18 ±1 mA.

(2) Using a flat-blade screwdriver, turn the external zero/span adjustment switch in the upper part of the case 90° in the UP direction (clockwise), and hold that position for three seconds.

Note: For reverse close (when the valve's fully closed position is on top), set the valve action to reverse close beforehand. See 4.4.3, "Valve system")

(3) The valve will automatically start to move, and will stop in about 3 to 4 minutes.

(4) When it stops, move it to a position that fits the input signal.

(5) After that, check whether it has been adjusted correctly.

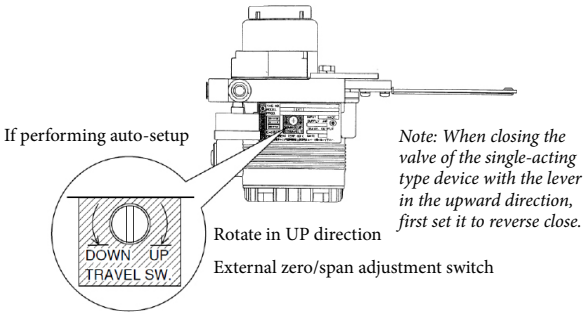

- Auto-setup can be performed with Field Communication Software(Model CFS100) as well.

⚠ Warning

When auto-setup is performed, the valve moves from fully closed to fully open, so there is a danger of, for example, getting your hand caught or affecting the process.
Before performing auto-setup, move away from the valve, and confirm that the process is safe.

Check the span point and perform span adjustment.

(1) Set the input signal to the span point (URV). (Zero adjustment can be performed if the input signal is adjusted to the zero point, and span adjustment can be performed if the input signal is adjusted to the span point.)

(2) Using a flat-blade screwdriver, turn the external zero span adjustment switch on the upper part of the case UP (clockwise) to cause the valve to move such that the feedback lever rises upward, or turn it DOWN (counterclockwise) to cause the valve to move such that the feedback lever drops downward.

5. Operation confirmation

Vary the input signal, and check the zero point and span point.

6. If suitable adjustment was not accomplished

[1] If auto-setup does not operate

- Check whether the input signal is 18 mA ±1 mA.
- Check whether the A/M switch is set to automatic. If it is set to manual, switch it to auto. See 5.2, "A/M Switch," in this document for information on operating procedures.
- Check the duty value of the electro-pneumatic module. Regarding the confirmation method, see "EPM (electro-pneumatic module) operation confirmation procedure" on page 3-9 in this document.
- Check whether the electronics module (terminal block) is installed correctly in the case on the body of the device.

[2] If hunting occurs

- Using the setup device, either change the actuator size (Param) or change the individual PID settings that control the AVP's degree of opening. Regarding the configuration method, see 4.4.4, "Control configuration," in this document.

[3] If the zero point floats or span adjustment cannot be performed

Referring to Table 3-1, "Integral type setting," in 3.1, "Auto-setup," in this document, check whether valve action is configured correctly. If not, it will be necessary to change the valve action (the direct/reverse setting). Referring to 4.4.3, "Valve system" in this document, configure the valve action correctly.

[4] If linearity characteristic is poor

- Check whether, when the attachment position of the feedback lever is the 50 % opening position, it is attached horizontally. If not, refer to 2.2, "Installation Method," in this document and correctly attach the feedback lever.
- Check the flow rate characteristics data. If equal %, quick open, or the like has been specified, and these are fundamentally unnecessary, refer to 4.4.6, "Flow Type," in this document and change this setting to linear.

Combination of model AVP300/301/302 (integral type) and single-acting rotary cylinder actuator

1. Attachment of feedback lever

In order to minimize the risk of damage to the feedback lever while it is carried or transported, and to minimize the packaging as well, the feedback lever is detached from the body of the device when it is packed. As a result, the feedback lever must be attached to the body of the device prior to installation of the device.

Attach the feedback lever securely, working from the front of the device, using the two included hexagon socket head bolts.

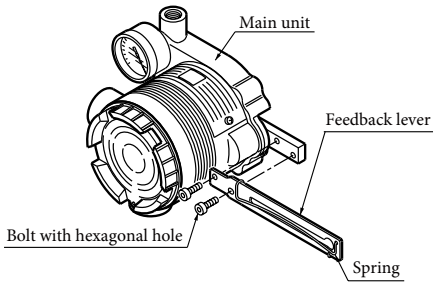

Attachment of Feedback Lever

2. Attachment and installation

[1] Attachment to the actuator

Attach to the actuator with a mounting plate that is appropriate for the actuator.

[2] Adjustment of attachment positions

Procedure for adjustment of attachment positions

Step	Procedure
1	Set the A/M switch to manual operation. (See 5.2, "A/M Switch.")
2	Supply air, and adjust the actuator air pressure such that the actuator stem reaches the travel midpoint.
3	Adjust the actuator such that the feedback lever reaches a 90° angle to the device's central vertical axis. Depending on the actuator being used, adjustment may be performed by moving the device, or it may be performed by moving the pin.
4	Set the A/M switch to automatic operation. (See 5.2, "A/M Switch.")

Note: The accuracy specifications can be satisfied by making the attachment angle 90° ± 2°.

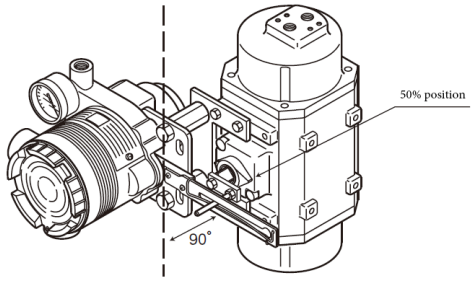

Adjustment of Attachment Positions

3. Air piping and electric wiring connection

Connect the air piping and electrical wiring.
For details, see section 2.2, "Installation Method," in this document.

4. Auto-setup

(1) Set the input signal to 18 ± 1 mA.

(2) Using a flat-blade screwdriver, turn the external zero/span adjustment switch in the upper part of the case 90° in the UP direction (clockwise), and hold that position for three seconds.

Note: For reverse close (when the valve's fully closed position is on top), set the valve action to reverse close beforehand. See 4.4.4, "Control configuration," in this document.

(3) The valve will automatically start to move, and will stop in about 3 to 4 minutes.

(4) When it stops, adjust it to a position that fits the input signal.

(5) After that, check whether it has been adjusted correctly.

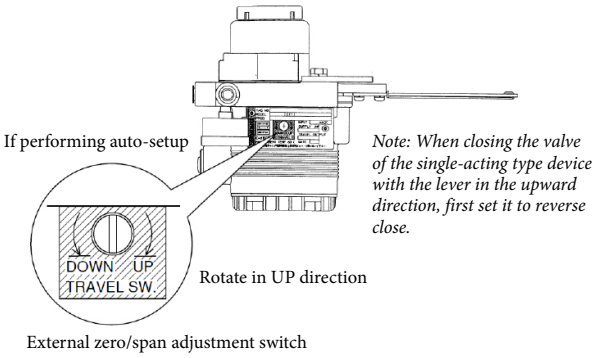

• Auto-setup can be performed with Field Communication Software(Model CFS100) as well.

⚠ Warning

When auto-setup is performed, the valve moves from fully closed to fully open, so there is a danger of, for example, getting your hand caught or affecting the process.
Before performing auto-setup, move away from the valve, and confirm that the process is safe.

Check the span point and perform span adjustment.

(1) Set the input signal to the span point (URV). (Zero adjustment can be performed if the input signal is adjusted to the zero point, and span adjustment can be performed if the input signal is adjusted to the span point.)

(2) Using a flat-blade screwdriver, turn the external zero span adjustment switch on the upper part of the case in the UP direction (clockwise) to cause the valve to move such that the feedback lever rises upward, or turn it DOWN (counterclockwise) to cause the valve to move such that the feedback lever drops downward.

5. Operation confirmation

Vary the input signal, and check the zero point and span point.

6. If suitable adjustment was not accomplished

[1] If auto-setup does not operate

- Check whether the input signal is 18 mA ±1 mA.
- Check whether the A/M switch is set to automatic. If it is set to manual, switch it to auto. See 5.2, "A/M Switch," in this document for information on operating procedures.
- Check the duty value of the electro-pneumatic module. Regarding the confirmation method, see "EPM (electro-pneumatic module) operation confirmation procedure" on page 3-9 in this document.
- Check whether the electronics module (terminal block) is installed correctly in the case on the body of the device.

[2] If hunting occurs

Using the setup device, either change the actuator size (Param) or change the individual PID settings that control the AVP's degree of opening. Regarding the configuration method, see 4.4.4, "Control configuration," in this document.

[3] If the zero point floats or span adjustment cannot be performed

Referring to Table 3-1, "Integral type setting," in 3.1, "Auto-setup," in this document, check whether valve action is configured correctly. If not, it will be necessary to change the valve action (the direct/reverse setting). Referring to 4.4.3, "Valve system," in this document, configure the valve action correctly.

[4] If linearity characteristic is poor

- Check whether, when the attachment position of the feedback lever is the 50 % opening position, it is attached horizontally. If not, refer to 2.2, "Installation Method," in this document and correctly attach the feedback lever.
- Check the flow rate characteristics data. If equal %, quick open, or the like has been specified, and these are fundamentally unnecessary, refer to 4.4.6, "Flow Type," in this document and change this setting to linear.

Combination of model AVP300/301/302 (integral type) and double-acting rotary cylinder actuator

1. Attachment of feedback lever

In order to minimize the risk of damage to the feedback lever while it is carried or transported, and to minimize the packaging as well, the feedback lever is detached from the body of the device when it is packed. As a result, the feedback lever must be attached to the body of the device prior to installation of the device.

Attach the feedback lever securely, working from the front of the device using the two included hexagon socket head bolts.

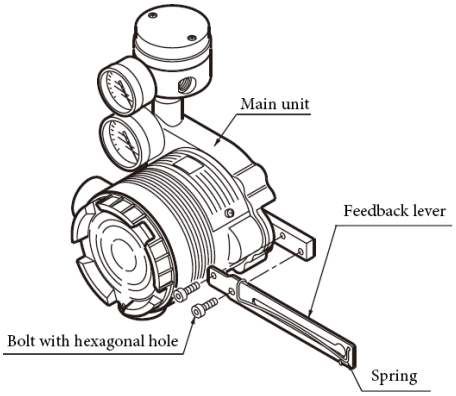

Attachment of Feedback Lever

2. Attachment and installation

[1] Attachment to the actuator

Attach to the actuator with a mounting plate that is appropriate for the actuator.

[2] Adjustment of attachment positions

Procedure for adjustment of attachment positions

Step	Procedure
1	Using for example the manual handle of the actuator or manual operation via the external pressure regulator with filter, set the position to 50 %. (With a double-acting actuator, manual operation cannot be performed using the A/M switch.)
2	Adjust the actuator such that the feedback lever reaches a 90° angle to the device's central vertical axis. Depending on the actuator being used, adjustment may be performed by moving the device, or it may be performed by moving the pin.

Note: The accuracy specifications can be satisfied by making the attachment angle 90° ± 2°.

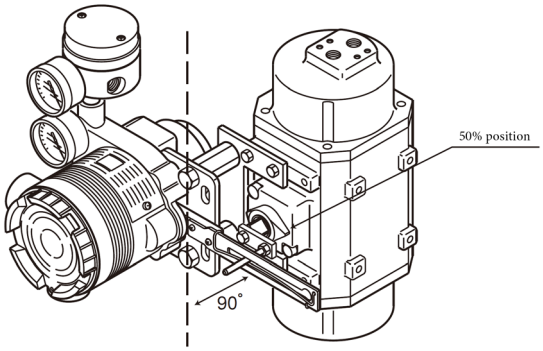

Adjustment of Attachment Positions

3. Air piping and electric wiring connection

- Air piping connection

(1) If control operation of control valve is direct operation

This refers to the state in which the valve moves in the closing direction as the input signal increases. Connect the reversing relay output OUT1 to the cylinder chamber that performs output in order to close the valve in response to increased pressure.

Next, connect the reversing relay output OUT2 to the cylinder chamber that performs output in order to open the valve in response to increased pressure.

(2) If control operation of control valve is reverse operation

This refers to the state in which the valve moves in the opening direction as the input signal increases. Connect the reversing relay output OUT2 to the cylinder chamber that performs output in order to close the valve in response to increased pressure.

Next, connect the reversing relay output OUT1 to the cylinder chamber that performs output in order to open the valve in response to increased pressure.

For details, see air piping connection and electric wiring connection in 1.3, “Description of Device Structure and Functions,” and 2.2, “Installation Method,” in this document.

4. Auto-setup

(1) Set the input signal to 18 ± 1 mA.

(2) Using a flat-blade screwdriver, turn the external zero/span adjustment switch in the upper part of the case 90° in the UP direction, and hold that position for three seconds.

Note: For reverse close (when the valve's fully closed position is on top), set the valve action to reverse close beforehand. See 4.4.3, "Valve system"

(3) The valve will automatically start to move, and will stop in about 3 to 4 minutes.

(4) When it stops, adjust it to a position that fits the input signal.

(5) After that, check whether it has been adjusted correctly.

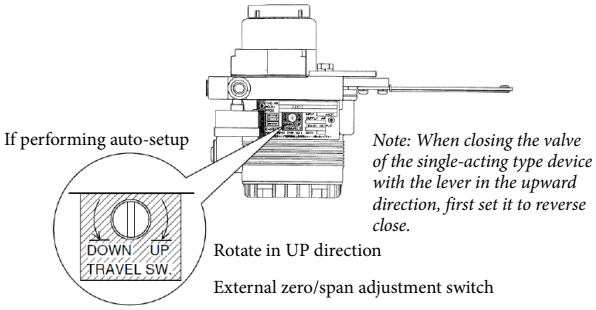

- Auto-setup can be performed with Field Communication Software(Model CFS100) as well.

⚠ Warning

When auto-setup is performed, the valve moves from fully closed to fully open, so there is a danger of, for example, getting your hand caught or affecting the process.
Before performing auto-setup, move away from the valve, and confirm that the process is safe.

Check the span point and perform span adjustment.

(1) Set the input signal to the span point (URV). (Zero adjustment can be performed if the input signal is adjusted to the zero point, and span adjustment can be performed if the input signal is adjusted to the span point.)

(2) Using a flat-blade screwdriver, turn the external zero span adjustment switch on the upper part of the case UP (clockwise) to cause the valve to move such that the feedback lever rises upward, or turn it DOWN (counterclockwise) to cause the valve to move such that the feedback lever drops downward.

5. Operation confirmation

Vary the input signal, and check the zero point and span point.

6. If suitable adjustment was not accomplished

[1] If auto-setup does not operate

- Check whether the input signal is 18 mA ± 1 mA.
- Check whether the A/M switch is set to automatic. If it is set to manual, switch it to auto. See 5.2, "A/M Switch," in this document for information on operating procedures.
- Check the duty value of the electro-pneumatic module. Regarding the confirmation method, see "EPM (electro-pneumatic module) operation confirmation procedure" on page 3-9 in this document.
- Check whether the electronics module (terminal block) is installed correctly in the case on the body of the device.

[2] If hunting occurs

- Using the setup device, either change the actuator size (Param) or change the individual PID settings that control the AVP's degree of opening. Regarding the configuration method, see 4.4.4, "Control configuration," in this document.

[3] If the zero point floats or span adjustment cannot be performed

Referring to Table 3-1, "Integral type setting," in 3.1, "Auto-setup," in this document, check whether valve action is configured correctly. If not, it will be necessary to change valve action (the direct/reverse setting). Referring to 4.4.3, "Valve system," in this document, configure valve action correctly.

[4] If linearity characteristic is poor

- Check whether, when the attachment position of the feedback lever is the 50 % opening position, it is attached horizontally. If not, refer to 2.2, "Installation Method," in this document and correctly attach the feedback lever.
- Check the flow rate characteristics data. If equal %, quick open, or the like has been specified, and these are fundamentally unnecessary, refer to 4.4.6, "Flow Type," in this document and change this setting to linear.

Combination of model AVP200/201/202 (remote type) and single-acting linear diaphragm actuator

1. Attachment of feedback lever

In order to minimize the risk of damage to the feedback lever while it is carried or transported, and to minimize the packaging as well, the feedback lever is detached from the valve travel detector when it is packed. As a result, the feedback lever must be attached to the valve travel detector prior to installation of the device.

The length of the feedback lever can if necessary be adjusted by attaching the extension lever between the feedback lever and the valve travel detector.

Adjustment of the feedback lever length is determined based on the form of the actuator.

If the actuator type is specified when ordering, and the extension lever is included:	Attach the extension lever to the body of the device, and then attach the feedback lever.
If the actuator type is specified when ordering, and the extension lever is not included:	The extension lever is not necessary. Attach the feedback lever directly to the body of the device.
If the actuator type is not specified when ordering:	The extension lever will be included. Refer to the table below to determine, based on the actuator with which the device is equipped, whether or not the extension lever is necessary.

Manufacturer	Extension Lever	Actuator Type	Code
Azbil Corporation	No	PSA1, 2, PSK1	YS
		HA1	YA
		HA2, 3	YT
		HK1	YK
		VA1 to 3	YQ
	Yes	PSA3, 4	YQ
		PSA6	YL
		HA4	YN
		PSA7	Y8
		VA4 to 6	YL
		RSA1	YF
		RSA2	YU
		VR1	YV
		VR2, 3	YR
		VR3H	Y6
		GOM83S, 84S, 103S	YG
		GOM124S	YM
Motoyama	No	#240, #280, #330	TA, TD
	Yes	#400, #500S, #500L	TB, TE
		#650S, #650L	TC, TF
Masoneilan	No	#11, #13	MA, MB
	Yes	#15, #18	MC, MF
Nihon Koso	No	#270, #320	TA, TD
	Yes	#400, #500	TB, TE

When connecting an actuator other than those in the table, connect the device and the actuator, and then, via manual operation, move the actuator slowly and ensure that the feedback lever does not interfere with a full stroke of the actuator.

If the feedback lever alone cannot cover a full stroke, attach the extension lever to it.

Attach the feedback lever securely, working from the front of the device, using the two included hexagon socket head bolts.

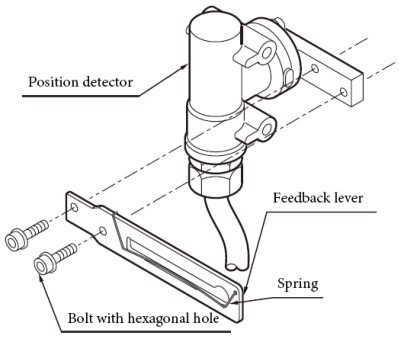

Attachment of Feedback Lever

Attach the extension lever securely, working from the front of the device, using the two included hexagon socket head bolts. Then, in the same way, attach the feedback lever securely, working from the back of the device. (The feedback lever can be attached from the front as well.)

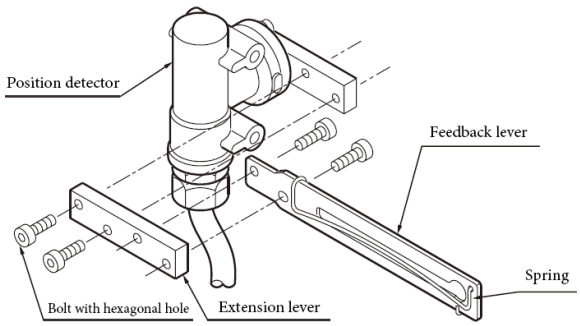

Attachment of Extension Lever and Feedback Lever

2. Attachment and installation

[1] Attachment to the actuator of the valve travel detector

When attaching the valve travel detector to the actuator, install the cable outlet such that it does not face upward. If it faces upward, change the direction of the feedback lever. For details, see 2.3, “Remote Type Handling.”

[2] Positioner body configuration

Install the body of the positioner onto the 2B stanchion.

[3] Adjustment of attachment positions

Procedure for adjustment of attachment positions

Step	Procedure
1	Set the A/M switch to manual operation. (See 5.2, "A/M Switch.")
2	Supply air, and adjust the actuator air pressure such that the actuator stem reaches the travel midpoint.
3	Adjust the actuator such that the feedback lever reaches a 90° angle to the valve travel detector's central vertical axis. Depending on the actuator being used, adjustment may be performed by moving the valve travel detector, or it may be performed by moving the pin.
4	Set the A/M switch to automatic operation. (See 5.2, "A/M Switch.")

Note: The accuracy specifications can be satisfied by making the attachment angle 90° ± 2°.

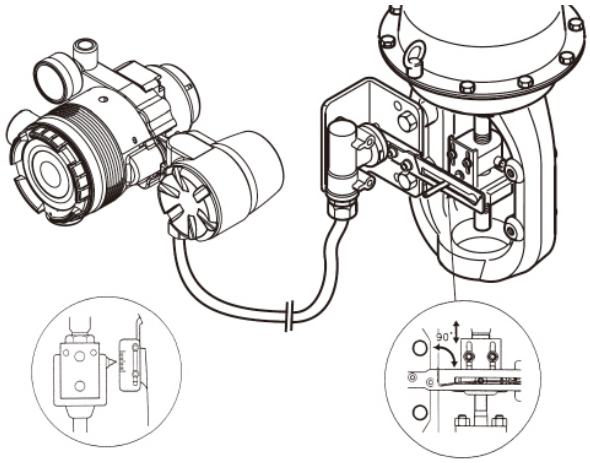

Adjustment of Attachment Positions

3. Air piping and electric wiring connection

[1] Air piping connection

For details, see air piping connection in 2.2, "Installation Method," in this document.

[2] Electrical wiring connection (cables between valve travel detector and positioner)

When shipped from the factory, the valve travel detector and the positioner body are normally shipped separated at the connector unit on the positioner body.

Referring to 2.3, "Remote Type Handling," in this document, connect the valve travel detector cable to the body of the device using the remote cable. When laying cable, follow appropriate electrical work guidelines.

4. Auto-setup

(1) Set the input signal to 18 ±1 mA.

(2) Using a flat-blade screwdriver, turn the external zero/span adjustment switch in the upper part of the case 90° in the UP (clockwise) direction (the DOWN direction for Azbil Corporation's VR and RSA actuators for VFR type control valves), and hold that position for three seconds.

Note: For reverse close (when the valve's fully closed position is on top), set the valve action to reverse close beforehand. See 4.4.3, "Valve system"

(3) The valve will automatically start to move, and will stop in about 3 to 4 minutes.

(4) When it stops, adjust it to a position that fits the input signal.

(5) After that, check whether it has been adjusted correctly.

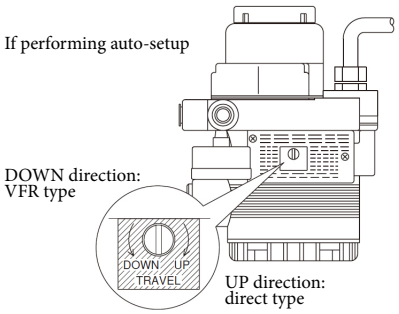

Note: When closing the valve of the single-acting type device with the lever in the upward direction, first set it to reverse close.

- Auto-setup can be performed with Field Communication Software(Model CFS100) as well.

⚠ Warning

When auto-setup is performed, the valve moves from fully closed to fully open, so there is a danger of, for example, getting your hand caught or affecting the process.
Before performing auto-setup, move away from the valve, and confirm that the process is safe.

Check the span point and perform span adjustment.

(1) Set the input signal to the span point (URV). (Zero adjustment can be performed if the input signal is adjusted to the zero point, and span adjustment can be performed if the input signal is adjusted to the span point.)

(2) Using a flat-blade screwdriver, turn the external zero span adjustment switch on the upper part of the case in the UP direction (clockwise) to cause the valve to move such that the feedback lever rises upward, or turn it DOWN (counterclockwise) to cause the valve to move such that the feedback lever drops downward.

5. Operation confirmation

Vary the input signal, and check the zero point and span point.

6. If suitable adjustment was not accomplished

[1] If auto-setup does not operate

- Check whether the input signal is 18 mA ± 1 mA.
- Check whether the A/M switch is set to automatic. If it is set to manual, switch it to auto. See 5.2, "A/M Switch," in this document for information on operating procedures.
- Check the duty value of the electro-pneumatic module. Regarding the confirmation method, see "EPM (electro-pneumatic module) operation confirmation procedure" on page 3-9 in this document.
- Check whether the electronics module (terminal block) is installed correctly in the case on the body of the device.

[2] If hunting occurs

- Using the setup device, either change the actuator size (Param) or change the individual PID settings that control the AVP's degree of opening. Regarding the configuration method, see 4.4.3, "Valve system," in this document.

[3] If the zero point floats or span adjustment cannot be performed

Referring to Table 3-1, "Integral type setting," in 3.1, "Auto-setup," in this document, check whether valve action is configured correctly. If not, it will be necessary to change the valve action (the direct/reverse setting). Referring to 4.4.3, "Valve system," in this document, configure the valve action correctly.

[4] If linearity characteristic is poor

- Check whether, when the attachment position of the feedback lever is the 50 % opening position, it is attached horizontally. If not, refer to 2.2, "Installation Method," in this document and correctly attach the feedback lever.
- Check the flow rate characteristics data. If equal %, quick open, or the like has been specified, and these are fundamentally unnecessary, refer to 4.4.6, "Flow Type," in this document and change this setting to linear.

Note: When performing valve maintenance, first detach the valve travel detector of the remote type from the mounting plate.

Combination of model AVP200/201/202 (remote type) and double-acting linear cylinder actuator

1. Attachment of feedback lever

In order to minimize the risk of damage to the feedback lever while it is carried or transported, and to minimize the packaging as well, the feedback lever is detached from the valve travel detector when it is packed. As a result, the feedback lever must be attached to the valve travel detector prior to installation of the device.

The length of the feedback lever can if necessary be adjusted by attaching the extension lever between the feedback lever and the valve travel detector.

Adjustment of the feedback lever length is determined based on the form of the actuator.

If the actuator type is specified when ordering, and the extension lever is included:	Attach the extension lever to the body of the device, and then attach the feedback lever.
If the actuator type is specified when ordering, and the extension lever is not included:	The extension lever is not necessary. Attach the feedback lever directly to the body of the device.
If the actuator type is not specified when ordering:	The extension lever will be included. Refer to the table below to determine, based on the actuator with which the device is equipped, whether or not the extension lever is necessary.

Manufacturer	Extension Lever	Actuator Type	Code
Azbil Corporation	Yes	VP5, 6, 7	Y1
		SLOP560, 1000, 1000X	Y2
		SLOP1500, 1500X	Y3
		DAP560, 1000, 1000X	Y4
		DAP1500, 1500X	Y5

(SLOP type and DAP type are limited to products with stroke of 100 mm or less)

When connecting an actuator other than those in the table, connect the device and the actuator, and then, via manual operation, move the actuator slowly and ensure that the feedback lever does not interfere with a full stroke of the actuator.

If the feedback lever alone cannot cover a full stroke, attach the extension lever to it.

Attach the feedback lever securely, working from the front of the device, using the two included hexagon socket head bolts.

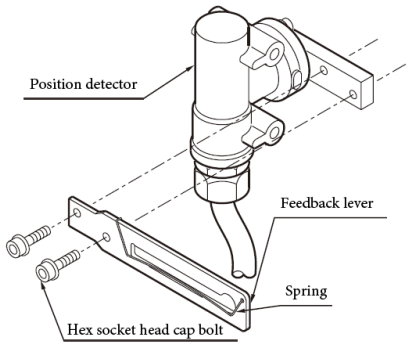

Attachment of Feedback Lever

Attach the extension lever securely, working from the front of the device, using the two included hexagon socket head bolts. Then, in the same way, attach the feedback lever securely, working from the back of the device. (The feedback lever can be attached from the front as well.)

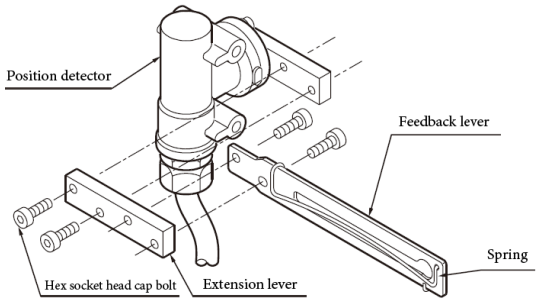

Attachment of Extension Lever and Feedback Lever

2. Attachment and installation

[1] Attachment to the actuator of the valve travel detector

When attaching the valve travel detector to the actuator, install the cable outlet such that it does not face upward. If it faces upward, change the direction of the feedback lever. For details, see 2.3, “Remote Type Handling.”

[2] Positioner body configuration

Install the body of the positioner onto the 2B stanchion.

[3] Adjustment of attachment positions

Procedure for adjustment of attachment positions

Step	Procedure
1	Set the A/M switch to manual operation. (See 5.2, “A/M Switch.”)
2	Supply air, and adjust the actuator air pressure such that the actuator stem reaches the travel midpoint.
3	Adjust the actuator such that the feedback lever reaches a 90° angle to the valve travel detector's central vertical axis. Depending on the actuator being used, adjustment may be performed by moving the valve travel detector, or it may be performed by moving the pin.
4	Set the A/M switch to automatic operation. (See 5.2, “A/M Switch.”)

Note: The accuracy specifications can be satisfied by making the attachment angle 90° ± 2°.

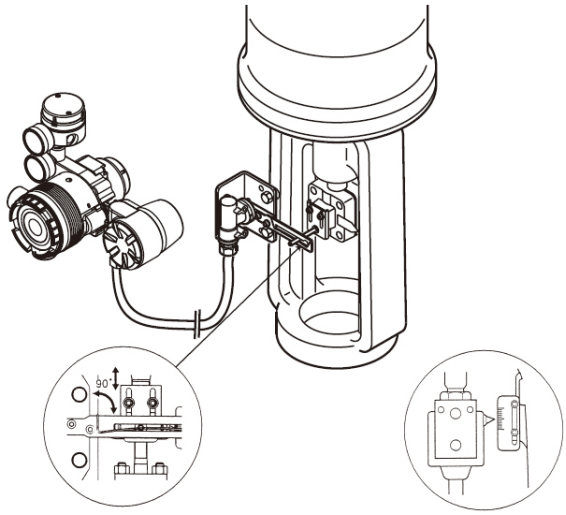

Adjustment of Attachment Positions

3. Air piping and electric wiring connection

[1] Air piping connection

(1) If control operation of control valve is direct operation

This refers to the state in which the valve moves in the closing direction as the input signal increases. Connect the reversing relay output OUT1 to the cylinder chamber that performs output in order to close the valve in response to increased pressure.

Next, connect the reversing relay output OUT2 to the cylinder chamber that performs output in order to open the valve in response to increased pressure.

(2) If control operation of control valve is reverse operation

This refers to the state in which the valve moves in the opening direction as the input signal increases. Connect the reversing relay output OUT2 to the cylinder chamber that performs output in order to close the valve in response to increased pressure.

Next, connect the reversing relay output OUT1 to the cylinder chamber that performs output in order to open the valve in response to increased pressure.

For details, see on air piping connection and electric wiring connection in 1.3, "Description of Device Structure and Functions," and 2.2, "Installation Method," in this document.

[2] Electrical wiring connection (cables between valve travel detector and positioner)

When shipped from the factory, the valve travel detector and the positioner body are normally shipped separated at the connector unit on the positioner body.

Referring to 2.3, "Remote Type Handling," in this document, connect the valve travel detector cable to the body of the device using the remote cable. When laying cable, follow appropriate electrical work guidelines.

4. Auto-setup

(1) Set the input signal to 18 ± 1 mA.

(2) Using a flat-blade screwdriver, turn the external zero/span adjustment switch in the upper part of the case 90° in the UP direction, and hold that position for three seconds.

Note: For reverse close (when the valve's fully closed position is on top), set the valve action to reverse close beforehand. See 4.4.3, "Valve system."

(3) The valve will automatically start to move, and will stop in about 3 to 4 minutes.

(4) When it stops, move it to a position that fits the input signal.

(5) After that, check whether it has been adjusted correctly.

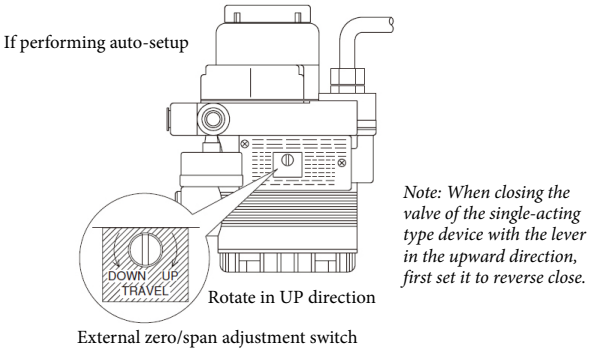

• Auto-setup can be performed with Field Communication Software(Model CFS100) as well.

⚠ Warning

When auto-setup is performed, the valve moves from fully closed to fully open, so there is a danger of, for example, getting your hand caught or affecting the process.
Before performing auto-setup, move away from the valve, and confirm that the process is safe.

Check the span point and perform span adjustment.

(1) Set the input signal to the span point (URV). (Zero adjustment can be performed if the input signal is adjusted to the zero point, and span adjustment can be performed if the input signal is adjusted to the span point.)

(2) Using a flat-blade screwdriver, turn the external zero span adjustment switch on the upper part of the case in the UP direction (clockwise) to cause the valve to move such that the feedback lever rises upward, or turn it DOWN (counterclockwise) to cause the valve to move such that the feedback lever drops downward.

5. Operation confirmation

Vary the input signal, and check the zero point and span point.

6. If suitable adjustment was not accomplished

[1] If auto-setup does not operate

- Check whether the input signal is 18 mA ± 1 mA.
- Check whether the A/M switch is set to automatic. If it is set to manual, switch it to auto. See 5.2, "A/M Switch," in this document for information on operating procedures.
- Check the duty value of the electro-pneumatic module. Regarding the confirmation method, see "EPM (electro-pneumatic module) operation confirmation procedure" on page 3-9 in this document.

  Check whether the electronics module (terminal block) is installed correctly in the case on the body of the device.

[2] If hunting occurs

- Using the setup device, either change the actuator size (Param) or change the individual PID settings that control the AVP's degree of opening. Regarding the configuration method, see 4.4.4, "Control configuration," in this document.

[3] If the zero point floats or span adjustment cannot be performed

Referring to Table 3-1, "Integral type setting," in 3.1, "Auto-setup," in this document, check whether valve action is configured correctly. If not, it will be necessary to change the valve action (the direct/reverse setting). Referring to 4.4.3, "Valve system," in this document, configure the valve action correctly.

[4] If linearity characteristic is poor

- Check whether, when the attachment position of the feedback lever is the 50 % opening position, it is attached horizontally. If not, refer to 2.2, "Installation Method," in this document and correctly attach the feedback lever.
- Check the flow rate characteristics data. If equal %, quick open, or the like has been specified, and these are fundamentally unnecessary, refer to 4.4.6, "Flow Type," in this document and change this setting to linear.

Note: When performing valve maintenance, first detach the valve travel detector of the remote type from the mounting plate.

Combination of model AVP200/201/202 (remote type) and single-acting rotary cylinder actuator

1. Attachment of feedback lever (pin)

In order to minimize the risk of damage to the feedback lever while it is carried or transported, and to minimize the packaging as well, the feedback lever is detached from the valve travel detector when it is packed. As a result, the feedback lever (pin) must be attached to the valve travel detector prior to installation of the device.

Using the two accompanying hexagonal nuts, attach the feedback lever (pin) firmly to the valve travel detector as shown in the diagram.

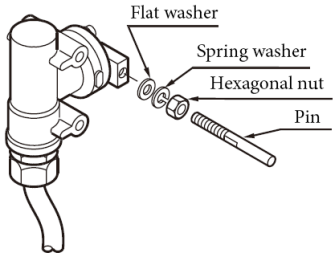

Attachment of feedback lever (pin)

2. Attachment and installation

[1] Attachment to the actuator of the valve travel detector

When attaching the valve travel detector to the actuator, install the cable outlet such that it does not face upward. If it faces upward, change the direction of the feedback lever. For details, see 2.3, "Remote Type Handling."

[2] Positioner body configuration

Install the body of the positioner onto the 2B stanchion.

[3] Adjustment of attachment positions

Procedure for adjustment of attachment positions

Step	Procedure
1	Set the A/M switch to manual operation. (See 5.2, "A/M Switch.")
2	Supply air, and adjust the actuator air pressure such that the position reaches the travel midpoint.
3	By adjusting the attachment position of the arm that holds up the feedback pin, adjust the actuator such that the feedback lever reaches a 90° angle to the valve travel detector's central vertical axis.
4	Set the A/M switch to automatic operation. (See 5.2, "A/M Switch.")

Note: The accuracy specifications can be satisfied by making the attachment angle 90° ± 2°.

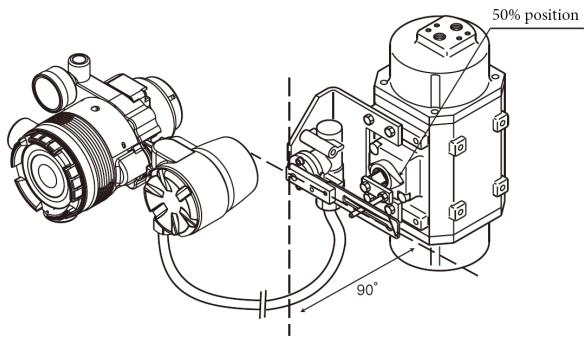

Adjustment of Attachment Positions

3. Air piping and electric wiring connection

[1] Air piping connection

For details, see air piping connection in 2.2, "Installation Method," in this document.

[2] Electrical wiring connection (cables between valve travel detector and positioner)

When shipped from the factory, the valve travel detector and the positioner body are normally shipped separated at the connector unit on the positioner body.

Referring to 2.3, "Remote Type Handling," in this document, connect the valve travel detector cable to the body of the device using the remote cable. When laying cable, follow appropriate electrical work guidelines.

4. Auto-setup

(1) Set the input signal to 18 ±1 mA.

(2) Using a flat-blade screwdriver, turn the external zero/span adjustment switch in the upper part of the case 90° in the UP direction (the DOWN direction for Azbil Corporation's VR and RSA actuators for VFR type control valves), and hold that position for three seconds.

Note: For reverse close (when the valve's fully closed position is on top), set the valve action to reverse close beforehand. See 4.4.3, "Valve system."

(3) The valve will automatically start to move, and will stop in about 3 to 4 minutes.

(4) When it stops, move it to a position that fits the input signal.

(5) After that, check whether it has been adjusted correctly.

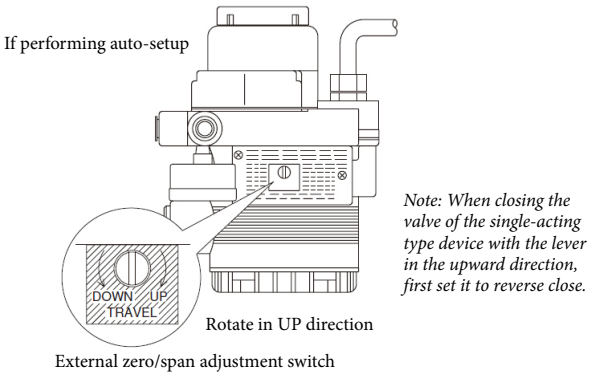

- Auto-setup can be performed with Field Communication Software(Model CFS100) as well.

⚠ Warning

When auto-setup is performed, the valve moves from fully closed to fully open, so there is a danger of, for example, getting your hand caught or affecting the process.
Before performing auto-setup, move away from the valve, and confirm that the process is safe.

Check the span point and perform span adjustment.

(1) Set the input signal to the span point (URV). (Zero adjustment can be performed if the input signal is adjusted to the zero point, and span adjustment can be performed if the input signal is adjusted to the span point.)

(2) Using a flat-blade screwdriver, turn the external zero span adjustment switch on the upper part of the case UP (clockwise) to cause the valve to move such that the feedback lever rises upward, or turn it DOWN (counterclockwise) to cause the valve to move such that the feedback lever drops downward.

5. Operation confirmation

Vary the input signal, and check the zero point and span point.

6. If suitable adjustment was not accomplished

[1] If auto-setup does not operate

- Check whether the input signal is 18 mA ± 1 mA.
- Check whether the A/M switch is set to automatic. If it is set to manual, switch it to auto. See 5.2, "A/M Switch," in this document for information on operating procedures.
- Check the duty value of the electro-pneumatic module. Regarding the confirmation method, see "EPM (electro-pneumatic module) operation confirmation procedure" on page 3-9 in this document.
- Check whether the electronics module (terminal block) is installed correctly in the case on the body of the device.

[2] If hunting occurs

- Using the setup device, either change the actuator size (Param) or change the individual PID settings that control the AVP's degree of opening. Regarding the configuration method, see 4.4.4, "Control configuration," in this document.

[3] If the zero point floats or span adjustment cannot be performed

Referring to Table 3-1, "Integral type setting," in 3.1, "Auto-setup," in this document, check whether valve action is configured correctly. If not, it will be necessary to change valve action (the direct/reverse setting). Referring to 4.4.3, "Valve system," in this document, configure valve action correctly.

[4] If linearity characteristic is poor

- Check whether, when the attachment position of the feedback lever is the 50 % opening position, it is attached horizontally. If not, refer to 2.2, "Installation Method," in this document and correctly attach the feedback lever.
- Check the flow rate characteristics data. If equal %, quick open, or the like has been specified, and these are fundamentally unnecessary, refer to 4.4.6, "Flow Type," in this document and change this setting to linear.

Note: When performing valve maintenance, first detach the valve travel detector of the remote type from the mounting plate.

Combination of model AVP200/201/202 (remote type) and double-acting rotary cylinder actuator

1. Attachment of feedback lever (pin)

In order to minimize the risk of damage to the feedback lever while it is carried or transported, and to minimize the packaging as well, the feedback lever is detached from the valve travel detector when it is packed. As a result, the feedback lever (pin) must be attached to the valve travel detector prior to installation of the device.

Using the two accompanying hexagonal nuts, attach the feedback lever (pin) firmly to the valve travel detector as shown in the diagram.

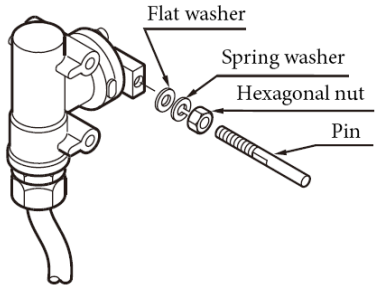

Attachment of Feedback Lever (Pin)

2. Attachment and installation

[1] Attachment to the actuator of the valve travel detector

When attaching the valve travel detector to the actuator, install the cable outlet such that it does not face upward. If it faces upward, change the direction of the feedback lever. For details, see 2.3, "Remote Type Handling."

[2] Positioner body configuration

Install the body of the positioner onto the 2B stanchion.

[3] Adjustment of attachment positions

Procedure for adjustment of attachment positions

Step	Procedure
1	Using for example the manual handle of the actuator or manual operation via the external pressure regulator with filter, set the position to 50 %. (With a double-acting actuator, manual operation cannot be performed using the A/M switch.)
2	By adjusting the attachment position of the arm that holds up the feedback pin, adjust the actuator such that the feedback lever reaches a 90° angle to the valve travel detector's central vertical axis.

Note: The accuracy specifications can be satisfied by making the attachment angle 90° ±2°.

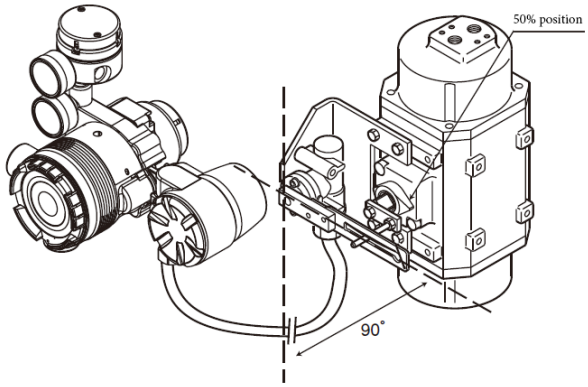

Adjustment of Attachment Positions

3. Air piping and electric wiring connection

[1] Air piping connection

(1) If control operation of control valve is direct operation

This refers to the state in which the valve moves in the closing direction as the input signal increases. Connect the reversing relay output OUT1 to the cylinder chamber that performs output in order to close the valve in response to increased pressure.

Next, connect the reversing relay output OUT2 to the cylinder chamber that performs output in order to open the valve in response to increased pressure.

(2) If control operation of control valve is reverse operation

This refers to the state in which the valve moves in the opening direction as the input signal increases. Connect the reversing relay output OUT2 to the cylinder chamber that performs output in order to close the valve in response to increased pressure.

Next, connect the reversing relay output OUT1 to the cylinder chamber that performs output in order to open the valve in response to increased pressure.

For details, see air piping connection and electric wiring connection in 1.3, "Description of Device Structure and Functions," and 2.2, "Installation Method," in this document.

[2] Electrical wiring connection (cables between valve travel detector and positioner)

When shipped from the factory, the valve travel detector and the positioner body are normally shipped separated at the connector unit on the positioner body.

Referring to 2.3, "Remote Type Handling," in this document, connect the valve travel detector cable to the body of the device using a special-purpose connector. When laying cable, follow appropriate electrical work guidelines.

4. Auto-setup

(1) Set the input signal to 18 ±1 mA.

(2) Using a flat-blade screwdriver, turn the external zero/span adjustment switch in the upper part of the case 90° in the UP direction, and hold that position for three seconds.

Note: For reverse close (when the valve's fully closed position is on top), set the valve action to reverse close beforehand. See 4.4.3, "Valve system."

(3) The valve will automatically start to move, and will stop in about 3 to 4 minutes.

(4) When it stops, move it to a position that fits the input signal.

(5) After that, check whether it has been adjusted correctly.

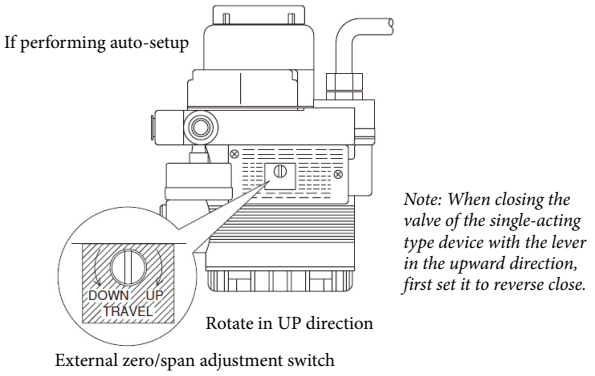

- Auto-setup can be performed with Field Communication Software(Model CFS100) as well.

⚠ Warning

When auto-setup is performed, the valve moves from fully closed to fully open, so there is a danger of, for example, getting your hand caught or affecting the process.
Before performing auto-setup, move away from the valve, and confirm that the process is safe.

Check the span point and perform span adjustment.

(1) Set the input signal to the span point (URV). (Zero adjustment can be performed if the input signal is adjusted to the zero point, and span adjustment can be performed if the input signal is adjusted to the span point.)

(2) Using a flat-blade screwdriver, turn the external zero span adjustment switch on the upper part of the case UP (clockwise) to cause the valve to move such that the feedback lever rises upward, or turn it DOWN (counterclockwise) to cause the valve to move such that the feedback lever drops downward.

5. Operation confirmation

Vary the input signal, and check the zero point and span point.

6. If suitable adjustment was not accomplished

[1] If auto-setup does not operate

- Check whether the input signal is 18 mA ± 1 mA.
- Check whether the A/M switch is set to automatic. If it is set to manual, switch it to auto. See 5.2, "A/M Switch," in this document for information on operating procedures.
- Check the duty value of the electro-pneumatic module. Regarding the confirmation method, see "EPM (electro-pneumatic module) operation confirmation procedure" on page 3-9 in this document.
- Check whether the electronics module (terminal block) is installed correctly in the case on the body of the device.

[2] If hunting occurs

- Using the setup device, either change the actuator size (Param) or change the individual PID settings that control the AVP's degree of opening. Regarding the configuration method, see 4.4.4, "Control configuration," in this document.

[3] If the zero point floats or span adjustment cannot be performed

Referring to Table 3-1, "Integral type setting," in 3.1, "Auto-setup," in this document, check whether valve action is configured correctly. If not, it will be necessary to change the valve action (the direct/reverse setting). Referring to 4.4.3, "Valve system," in this document, configure the valve action correctly.

[4] If linearity characteristic is poor

- Check whether, when the attachment position of the feedback lever is the 50 % opening position, it is attached horizontally. If not, refer to 2.2, "Installation Method," in this document and correctly attach the feedback lever.
- Check the flow rate characteristics data. If equal %, quick open, or the like has been specified, and these are fundamentally unnecessary, refer to 4.4.6, "Flow Type," in this document and change this setting to linear.

Note: When performing valve maintenance, first detach the valve travel detector of the remote type from the mounting plate.

Product unpacking, verification, and storage

Unpacking

This device is a precision instrument. Handle it carefully in order to prevent accidents, injuries, etc.

Upon unpacking the product, verify that the following items are included. (When the device is shipped individually)

- Main unit
- Feedback lever and hex socket head cap bolts (2)
- Hexagonal bar wrench (1) (for feedback lever)
- Regulator (optional)
- Mounting bracket (optional)
- Flameproof packing cable gland and flame-proof elbow (explosion-proof option)
- User's Manual (this document) (included when specified during purchase)
- Extension lever and two hex socket head cap bolts (optional)

Checking specifications

The specifications are written on the nameplate on the body of this device. Referring to the Appendix, confirm that these are as designated. In particular, be sure to check the following points.

- Tag number (TAG NO.)
- Model number (MODEL)
- Production number (PROD)
- Input current range (INPUT) (since the input range can be changed using Field Communication Software(Model CFS100), the inscription on the nameplate is fixed to 4 to 20 mA as per explosion-proofing regulations.
- Supply air pressure (SUPPLY)
- Explosion-proofing test conformity label (if explosion-proofing specification applies)

Contact point for inquiries

If anything in the specifications is unclear, please contact the office that appears at the end of this manual. When making an inquiry, be sure to include the model number (MODEL) and production number (PROD).

Storage

If the device that you have purchased is to be stored, please observe the following precautions.

- If storing the device unused

    1. Store the device in the packed state in which it was shipped.
    2. Store the device indoors in a low-vibration, low-shock area, and maintain normal indoor temperature and humidity (about 25 °C and 65 %).

- If storing the device after being used

    1. Prevent humidity from entering the device by attaching the terminal box cover firmly and cover the conduit connection port with tape.
    2. Prevent humidity and contaminants from entering the device by covering the two air piping connections (SUP and OUT) and the pilot cover bleed holes with tape.
    3. Return the product to the packed state in which it was shipped.
    4. Store the device indoors in a low-vibration, low-shock area, and maintain normal indoor temperature and humidity (about 25 °C and 65 %).

Contents

Chapter 1: Control System Structure 1-1

1.1 System Configuration 1-2
1.2 Travel Transmission Output (Models AVP301 and AVP201) 1-3
1.2.1 Structure of system without travel transmission output 1-4
1.2.2 Structure of system with travel transmission (analog output) 1-4
1.2.3 Structure of system with travel transmission (digital output) 1-5
1.3 Description of Device Structure and Functions 1-6
1.4 Terminal Box 1-8

Chapter 2: Installation 2-1

2.1 Installation Location Selection Criteria 2-2
2.1.1 Installation location selection criteria 2-2
2.1.2 Instrumentation air 2-2
2.2 Installation Method 2-4
2.2.1 Attachment to actuator 2-4
2.2.2 Air piping connection 2-7
2.2.3 Handling of double-acting reversing relay 2-10
2.2.4 Electrical Wiring Connection 2-13
2.2.5 Power supply for input signal and travel transmission 2-15
2.2.6 Cables (for input signal or travel transmission) 2-16
2.3 Remote Type Handling 2-18
2.3.1 Remote type cable handling 2-18
2.3.2 Attachment to the actuator of the valve travel detector 2-20
2.3.3 Positioner body installation 2-21
2.3.4 Cabling between valve travel detector and positioner body 2-21
2.4 Flameproof Cable Gland and Explosion-proof Universal Elbow 2-22

Chapter 3: Operation 3-1

3.1 Auto-setup 3-2
3.1.1 Overview of auto-setup 3-3
3.1.2 Auto-setup operation 3-4
3.2 Zero/Span Adjustment 3-6
3.2.1 Procedure to adjust valve to fully closed position (zero point) 3-7
3.2.2 Procedure to adjust valve to fully open position (span point) 3-7
3.3 Starting Operation 3-8
3.3.1 Pre-operation confirmation 3-8
3.3.2 Starting operation 3-10
3.3.3 Stopping operation 3-10

Chapter 4: Communication-Based Operation 4-1

4.1 Starting Communication 4-2
Wiring method 4-2
4.2 Communication-Based Operation 4-3
Menu Tree 4-4
4.3 Operation Data Confirmation 4-7
4.3.1 Measured value confirmation 4-7
4.3.2 Adjustment data confirmation 4-7

4.4 Device Configuration and Adjustment 4-8
4.4.1 Auto-setup 4-8
4.4.2 Zero/span adjustment 4-9
4.4.3 Valve system 4-10
4.4.4 Control configuration 4-11
4.4.5 Input range 4-13
4.4.6 Flow Type 4-14
4.4.7 Travel Cutoff 4-15
4.4.8 Travel Transmission (Model AVP301/201) 4-16
4.5 Device Information Confirmation and Modification 4-17
4.5.1 Device information/production number confirmation and modification 4-17
4.5.2 Device software revision information confirmation 4-18
4.6 Maintenance 4-19
4.6.1 Mode 4-19
4.6.2 Input calibration 4-19
4.6.3 Travel transmission signal output calibration (D/A trim) 4-20
4.6.4 Dummy input signal 4-20
4.6.5 Dummy Drive Signal 4-21
4.6.6 Dummy travel transmission signal output (loop test) 4-21
4.6.7 Save Current Settings 4-22
4.6.8 Load saved settings 4-22
4.7 Valve Diagnostic Parameter Configuration 4-23
4.7.1 Stick-Slip 4-23
4.7.2 Total Stroke 4-24
4.7.3 Cycle Count 4-24
4.7.4 Travel Histogram 4-25
4.7.5 0 % Travel Error 4-25
4.7.6 Shut-Off Count 4-26
4.7.7 Max Travel Speed 4-26
4.7.8 Deviation Alarm 4-27
4.7.9 Temperature Alarm 4-27
4.8 Self-diagnostics 4-28
4.8.1 Critical Failure 4-28
4.8.2 Device Status 4-28
4.8.3 Valve Diagnostic Status 4-29
4.9 Precautions 4-30

Chapter 5: Maintenance and Troubleshooting 5-1

5.1 Troubleshooting 5-2
Types of problems 5-2
Troubleshooting 5-3
5.2 A/M Switch 5-6
5.3 Filter Replacement and Restriction Maintenance 5-8
Filter replacement and restriction maintenance methods 5-8
5.4 Cleaning the Flapper 5-9
5.5 Insulation Resistance Test 5-9
5.6 Adjustment Procedure when using device with Booster Relay 5-10
5.7 List of Default Internal Data Values 5-11
5.8 Internal Block Diagram and I/O Flow 5-12

5.9 Replacement Parts.....5-13

Chapter 6: Cautions Regarding Explosion-proof Models..... 6-1

6.1 Cautions regarding explosion-proof models.....6-2

6.2 Notes on Discontinued Explosion-Proof Models.....6-36

Appendix A: Specifications..... A-1

Chapter 1: Control System Structure

Overview of this chapter

This chapter describes the configuration of the control system used by this device.

- The input/output system structure of the device is described.
- The structure and the names and functions of the various parts of the device are described.
-

1.1 System Configuration

This device is a smart valve positioner that can be connected to a 4 to 20 mA signal line from the output of a controller. Since all adjustments can be performed electrically, any desired relationship can be set between the input signal and the position of the control valve. Split range and other special settings are also easy to specify. In addition, by using a four-line connection, the device can transmit the control valve position to the host monitoring system as either a 4 to 20 mA analog signal or as a DE digital signal. (Only models AVP301 and AVP201 have travel transmission.)

An overview of the control valve control system used by this device is shown below.

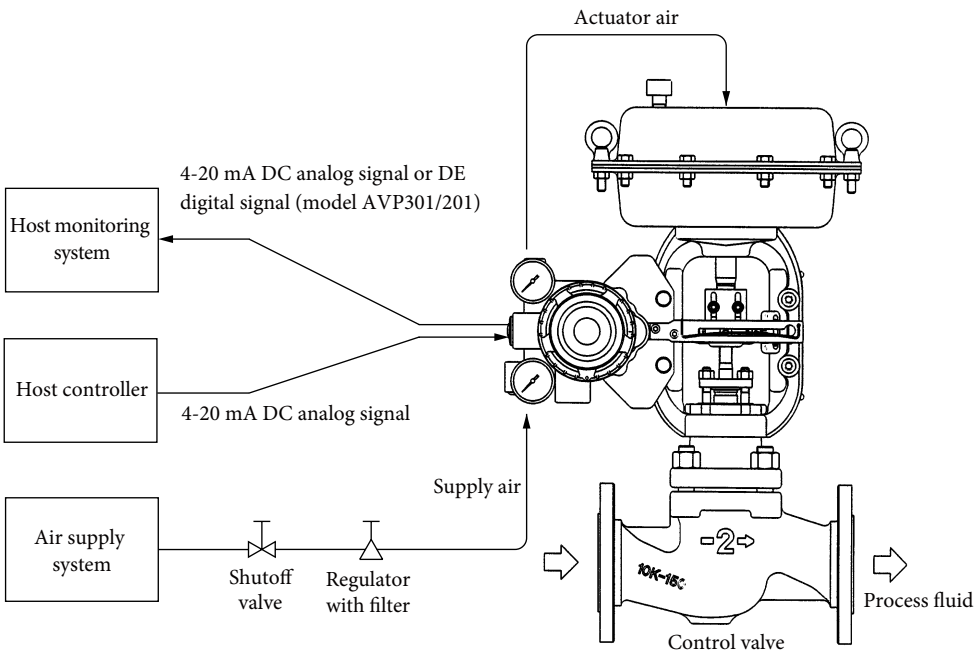

Figure 1-1. Control System Overview Diagram

1.2 Travel Transmission Output (Models AVP301 and AVP201)

This device (models AVP301 and AVP201) has the ability to transmit the position of the control valve. The device's travel transmission system offers two output formats, depending on the purpose. There is a system that outputs an analog signal and a system that outputs a digital signal.

Analog output

To output the position only to the host monitoring device using a analog values, set up the analog output system. Normally, the range from the fully closed position to the fully open position is output as a 4–20 mA range.

Note that if the input signal drops below 3.85 mA, the travel transmission output might become unreliable.

Digital output

To output the position along with a variety of device settings and self-diagnostic results to the host monitoring device, set up the digital output system.

Output format switching

The output format provided by the device is specified by the user as configuration data when ordering the device. The device is set at the factory to either analog output specifications or digital output specifications.

Note, however, that the output format can be switched freely by the user using the Field Communication Software(Model CFS100).

If a serious problem occurs with this device, the travel transmission system will output a value determined by the burnout (fail-safe) direction.

Burnout (fail-safe) direction

The burnout direction is automatically determined based on the actuator action direction, valve action, and positioner action set during auto-setup.

If the burnout direction is Low, the travel transmission system will output an analog current of 3.8 mA or less in the event of a major failure.

If the burnout direction is High, the travel transmission system will output an analog current of 20.8 mA or more in the event of a major failure.

1.2.1 Structure of system without travel transmission output

This figure shows the system structure of the device when the travel transmission function is not used.

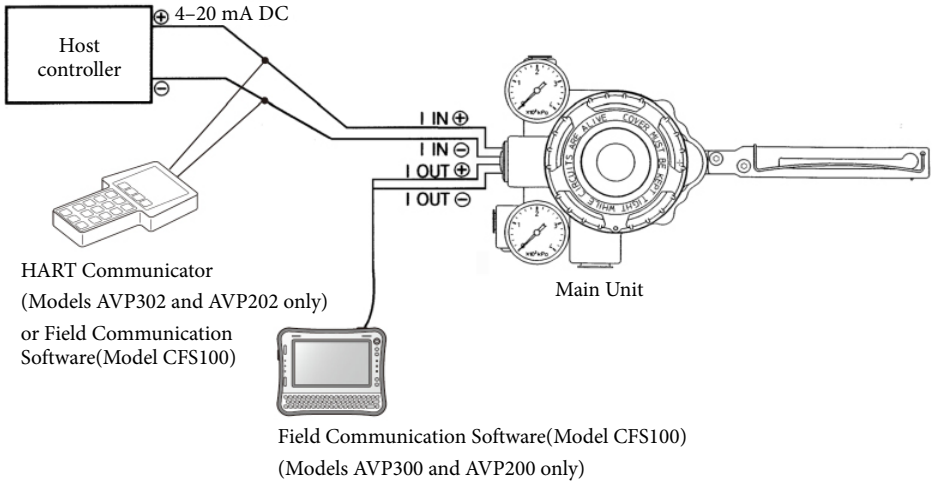

Figure 1-2. Structure of System without Output (Model AVP300, AVP302, AVP200, and AVP202)

1.2.2 Structure of system with travel transmission (analog output)

This figure shows an example of the structure of a system in which the position detected by the device is output as a 4–20 mA DC analog signal.

In this system structure, the analog signal from the device is directly output to the host monitoring system.

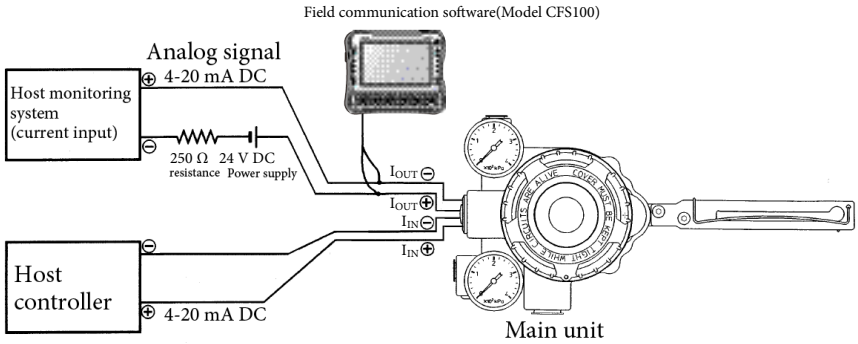

Figure 1-3. Structure of System with Analog Output (Models AVP301 and AVP201)

1.2.3 Structure of system with travel transmission (digital output)

This figure shows the structure of a system in which the position detected by the device, the values of the device settings, and the results of self diagnostics are output in the DE (Digital Enhancement) protocol for digital signal transmission.

In this system structure, the digital signals in the DE protocol transmitted from the device are output to a monitoring system that is capable of directly inputting these signals.

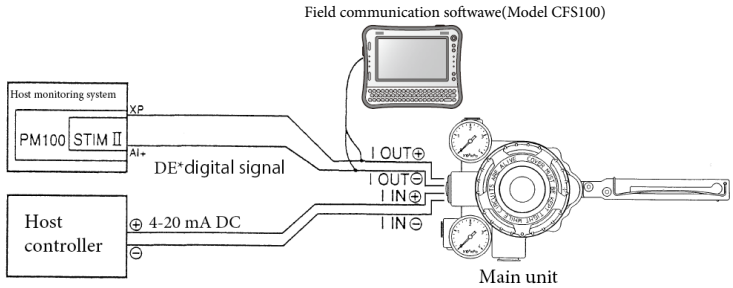

Figure 1-4. Structure of System with Digital Output (Models AVP301 and AVP201)

STIM II (Smart Transmitter Interface Module)

- An interface module for digital signals based on the DE protocol.*
  PM100 (process controller, R20 or later)
- A process controller on the UCN. Simultaneously performs functions such as adjustment control, sequencing, calculation, process I/O, etc.

⚠Caution

- If the device outputs the travel transmission output signal as a PV using the STIM II, be sure to set the valve forced fully closed value (SHUT OFF) to −0.2 % or greater so that the value of the process variable for the position signal STI point will not be BadPV.

1.3 Description of Device Structure and Functions

The structure of the body of the device is shown below.

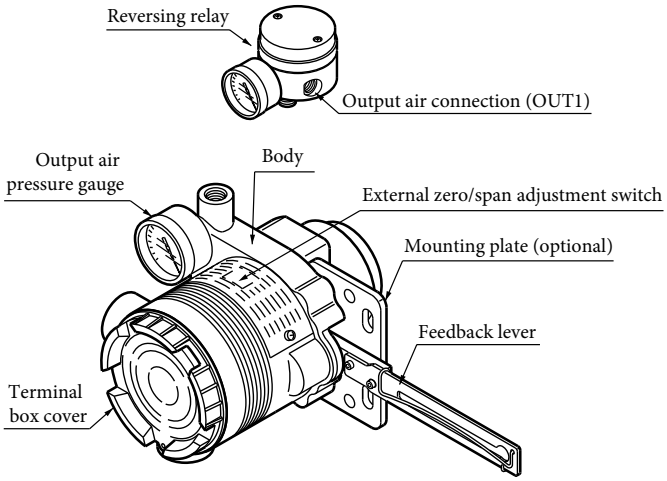

Figure 1-5-1. Body Structure (Front)

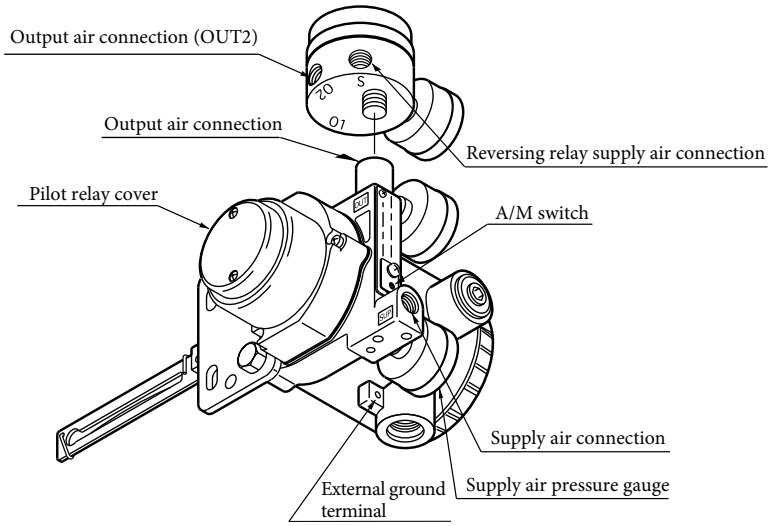

Figure 1-5-2. Body Structure (Rear)

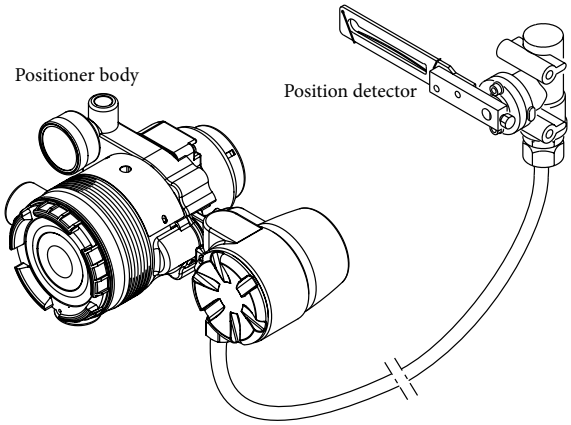

Figure 1-5-3. 200 Series

Each component is described in the following table.

Name	Description
Main unit (also “Body”)	• Houses the electronics module, EPM (electro-pneumatic module), and VTD (position sensor).
Pilot relay	• Amplifies the pneumatic signal from the EPM (electro-pneumatic module) and converts it to a pneumatic signal for the actuator.
Feedback lever	• Receives the motion of the control valve lift and transmits it to the VTD (position sensor).
A/M switch	• Switches the output air control method between the automatic operation state and the manual operation state. See 5.2 for information on operating procedures.
External zero/span adjustment switch	• Enables the zero and span to be adjusted and auto setup to be performed with just a flat-blade screwdriver, without using a setup device.
Supply air pressure gauge	• Indicates the pressure of the supplied air.
Output air pressure gauge	• Indicates the pressure of the output air.
Supply air connection	• The air supply goes to this connection. • Labeled “SUP.”
Output air connection	• The output air is delivered from this connection to the actuator. • Labeled “OUT.”
Mounting plate (optional)	• Used to mount the device on the actuator. • Its shape differs depending on the specifications (the actuator type).
Reversing relay	• Used when a double-acting actuator is used. The reversing relay is added at the output connection of the device. The reversing relay provides two outputs: output air pressure 1 (OUT1), which is the device's output air pressure without modification, and output air pressure 2 (OUT2), which is the output air pressure resulting when the air pressure supplied to OUT1 is subtracted from the reversing relay (SUP). Connecting these outputs to the two cylinder chambers of the double-acting cylinder allows the cylinder to function as a double-acting actuator.
Output air connection (OUT1)	• The output air is delivered from this connection to the actuator. • “O1” is stamped on the lower section of the reversing relay.
Output air connection (OUT2)	• The output air is delivered from this connection to the actuator. • “O2” is stamped on the lower section of the reversing relay.

1.4 Terminal Box

Houses an input signal (controller output) terminal, an output signal (travel transmission) terminal, and an internal ground terminal.

The structure of the terminal box is shown below.

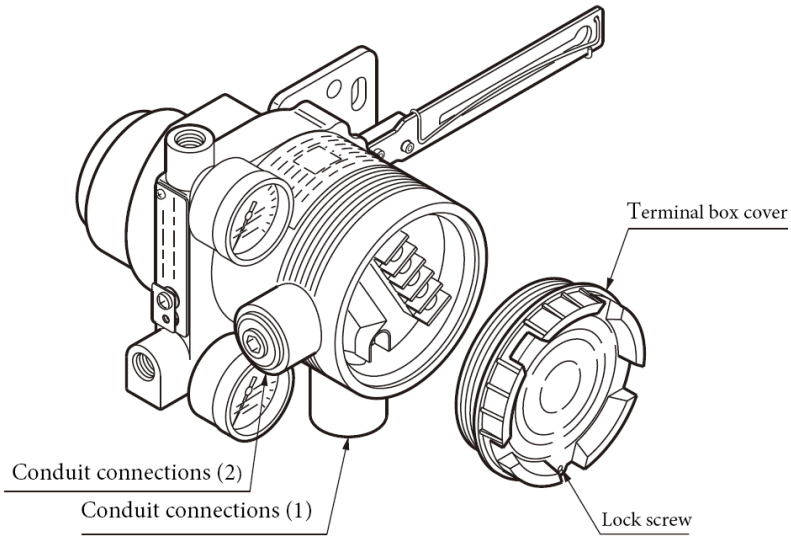

Figure 1-6. Structure of Terminal Box

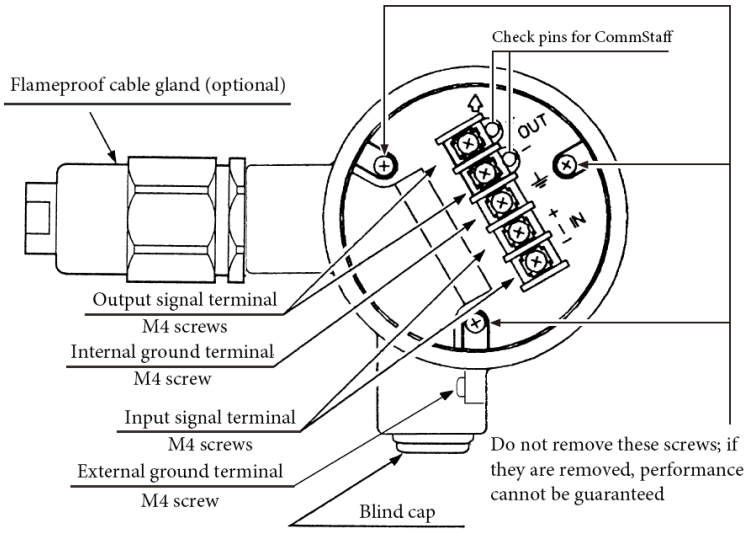

Figure 1-7. Terminal Block of Terminal Box

Each component of the terminal box is described in the following table.

Name	Description
Terminal box cover	• The cover has a pressure-resistant flameproof structure.
Cover locking screw	• Be sure to tighten this when an explosion-proof model is used in a hazardous area.
Input signal terminal	• Labeled "I IN." • Connect the signal cable from the host controller.
Output signal terminal	• Labeled "I OUT." • Connect the signal cable for travel transmission. • This terminal screw is not present in model AVP300/302/200/202 (without travel transmission).
External ground terminal (Figure 1-5-2)	• Ground this pin in accordance with the specifications.
Internal ground terminal	• When using the device, use either the internal or external ground terminal.
Conduit connection (1)	• Port for wiring cables. • When using an explosion-proof model in a hazardous area, be sure to use the specified flameproof cable gland (available as an option).
Conduit connection (2)	• Port through which wiring cables are pulled. • When using an explosion-proof model in a hazardous area, be sure to use the specified flameproof cable gland (available as an option). • This port is normally sealed with a blind cap.
Check pins for setup device	• The device can communicate with a setup device if the connection hooks of the setup device communication cable are connected to these pins. (Models AVP300/301/200/201 only)

Chapter 2: Installation

Overview of this chapter

This chapter describes installation of the device and connection of its piping and wiring.

Cautions to ensure safe operation

⚠ Warning
Do not perform wiring work, turn on the electricity, etc., when your hands are wet. There is a risk of electric shock. Perform this work with the power supply turned off, and with dry or gloved hands.
When wiring in a hazardous area, work according to the methods prescribed by the guidelines for the hazardous area.
For flameproof explosion-proof specifications, do not under any circumstances open the cover during operation (when powered up).

⚠ Caution
After installing the device, do not place your body weight on it, use it as a scaffold, etc. There is a risk that it could fall over.
Do not touch the device unnecessarily while it is in operation. Depending on the environment in which the device is used, there is a danger that the surface of the device may be very hot or very cold.
When opening the cover of the terminal box, be careful of the edges of the cover, the threads of the screws on the main unit, etc. There is a possibility of injury.
Use a DC power supply that has overload protection. An overload can cause the emission of smoke and fire.
Bringing tools and the like into contact with the glass portion of the display can cause damage or injury. Exercise sufficient caution. In addition, be sure to wear safety glasses.
As this product is extremely heavy, watch your footing, and be sure to wear safety shoes.
When the device is in operation, do not touch moving parts such as the feedback lever. Your hand may become caught, resulting in injury.
Supply power correctly based on the specifications. An incorrect power input can damage the instrument.
When working in a high-temperature or low-temperature environment, wear gloves and other protective equipment.
Do not bring magnets or magnetic screwdrivers near the device. There is a possibility that the control valve will move in response.

2.1 Installation Location Selection Criteria

This device has been designed to withstand harsh environmental conditions, but for maximum performance, select an installation location that conforms to the criteria.

2.1.1 Installation location selection criteria

Install this device in a location that satisfies the conditions below.

- Operating temperature range that conforms to the explosion-protection requirements
- Relative humidity of 10 to 90 %
- Ambient temperature change rate of not more than ±20 °C/hour.
- Magnetic field induction of not more than 400 A/m (and avoid locations near large-scale transformers, high-frequency (e.g., microwave) furnaces, etc.)
- Do not use a transceiver near the device.
- Vibration of not more than 20 m/s^2 (5 to 400 Hz) (model AVP300/301/302 and AVP200/201/202 main unit)
- Vibration of not more than 100 m/s^2 (5 to 2000 Hz) (model AVP200/201/202 valve travel detector section)

Note

The vibration conditions for this device are prescribed in terms of the vibration at the positioner.

2.1.2 Instrumentation air

Since this device employs a flapper nozzle structure in the electro-pneumatic module, if the instrumentation air is dirty or contains oil, moisture, or the like, the operation of the positioner could be impeded, or an unrecoverable failure could be caused. For this reason, the quality of the instrumentation air to be supplied to the device is defined as follows (taken from JIS C1805-1 [2001]):

- Solid matter: there must be no particles with a diameter that exceeds 3 μm.
- Oil: there must be less than 1 ppm in terms of mass
- Supply air humidity: dew point temperature must be at least 10 °C lower than temperature of the body of the device

Follow the specifications stated above when selecting a compressor and a main-line type or end-installation type compressed air cleaner (filtration device).

1) Compressed air cleaner for main lines

The specifications above can be satisfied by selecting a main line filter, micro-alescer, or other compressed air cleaner for main lines produced by SMC Corporation or CKD Corporation, which are well-known as manufacturers of compressed air cleaners.

2) End-installation type compressed air cleaner

If fundamental measures cannot be taken on main lines due to problems related to, for example, control valve installation, install an end-installation type compressed air cleaner (oil mist removal equipment) and supply instrumentation air to the device through this compressed air cleaner.

[Equipment usage examples]

● *Products produced by SMC Corporation*

- Mist separator

  AM150 and AM250 series
  (Filtration rate: 0.3 μm; secondary oil mist concentration: 1.0 mg/m^3)

● *Products produced by CKD Corporation*

- Oil mist filter

  M1000 and M3000 series
  Mantle S type (filtration rate: 0.3 μm; residual oil: 1.0 mg/m^3)

Note

Select compressed air cleaner specifications in accordance with the usage conditions.

Even if the oil mist removal equipment mentioned above is installed, appropriate inspections and maintenance of the pneumatic circuit are necessary for stable long-term operation. Be sure to accompany the installation of oil mist removal equipment with periodic inspections and maintenance.

Any failures of this device which are caused by unsatisfactory quality of the instrumentation equipment air are not covered by the warranty.

2.2 Installation Method

2.2.1 Attachment to actuator

Smart valve positioners are designed for use in combination with a control valve that uses a linear or rotary actuator. The main unit weighs about 2.5 kg. It should be attached in the same manner as a conventional electro-pneumatic positioner.

⚠Caution

- During installation, be careful to avoid injury from edges on the main unit and actuator, sharp edges on the threads of screws, etc. The type of mounting plate and the mounting method and procedure differ depending of the type of actuator to which the device is attached. If installation is not performed correctly, it will not be possible to realize the potential performance of the device, and damage to or failure of the device may result. Be careful of the following points.
- The mounting plate and accompanying accessories differ depending on the specifications (actuator type). Be sure to use those that are appropriate for the actuator to be installed.
- When installing the control valve, leave as much space as possible around it, taking ease of maintenance (piping, wiring, adjustment, etc.) into consideration.
- To the extent possible, transport the device to the installation location in its packaged state.
- During installation, do not apply excessive force to the feedback lever.
- Do not bend the feedback pin.
- Tighten bolts securely.
- If the pressure regulator with filter is installed with the device, install with the drain of the pressure regulator with filter facing downward. If the pressure regulator with filter cannot be attached vertically (with the drain facing downward), remove it from the device.
- In order to avoid the possibility of rainwater entering the pressure gauge, install the gauge such that it does not face upward or downward. In addition, the pressure gauge has a rainwater drain on its underside, so install the gauge with this hole facing downward.

Installation examples

Some typical installation examples are shown in the diagrams below. For actuators not appearing in the diagrams below, see the installation diagrams included with this device.

[HA1 actuator]

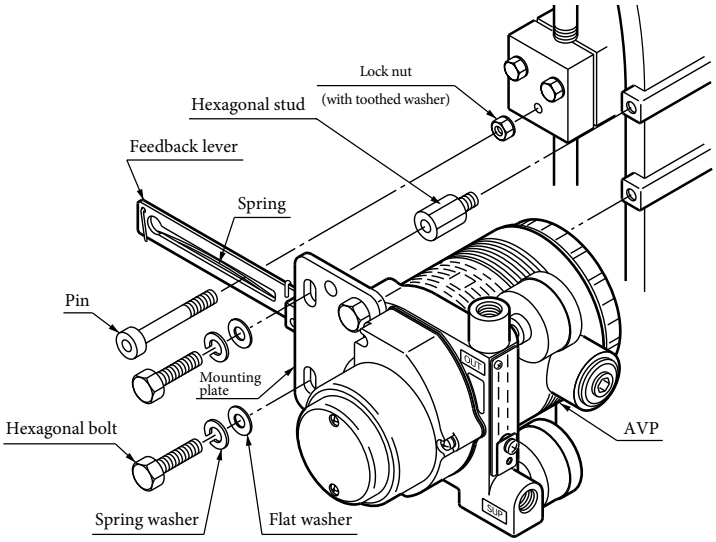

Figure 2-1-1. Mounting the Device on an HA1 Actuator

[HA2-4, PSA1-4 and 6, and VA1-6 actuators]

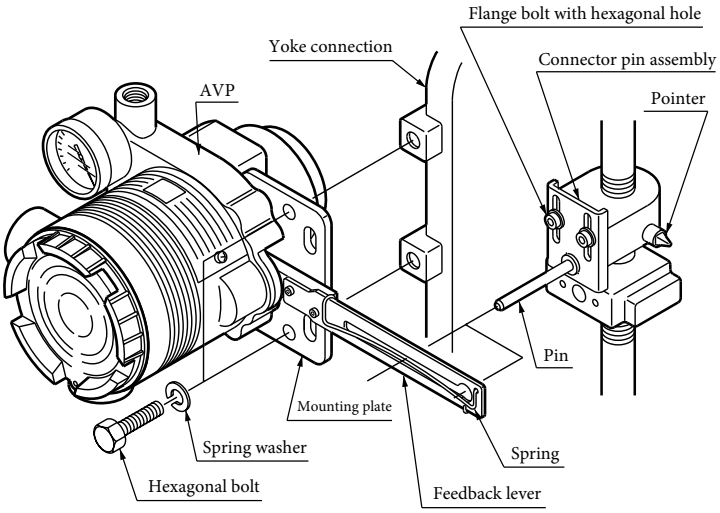

Figure 2-1-2. Mounting on AVP Actuators HA2-4, PSA1-4 and 6, and VA1-6

[Double-acting rotary cylinder actuator]

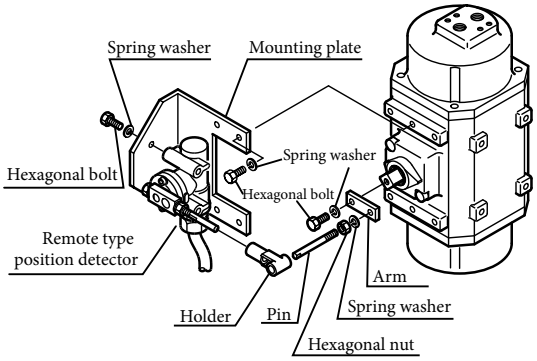

Figure 2-1-3. Mounting on a Remote Type Rotary Cylinder Actuator

Installation procedure

The general installation procedure is shown below.

Step	Procedure
1	Fasten the mounting plate securely to the rear of the positioner using the two hexagonal bolts (M8×20) and spring washers provided.
2	Fasten the positioner (mounting plate) securely to the actuator's mounting structure using the bolts and washers provided. During this operation, pass the actuator's feedback pin through the slot in the positioner's feedback lever.

Connection of feedback pin and feedback lever (1)

The following points must be observed when connecting the device's feedback lever and the actuator's feedback pin. Be sure to connect these correctly.

(1) Only a 6 mm diameter pin may be used.

(2) The pin should be clamped.

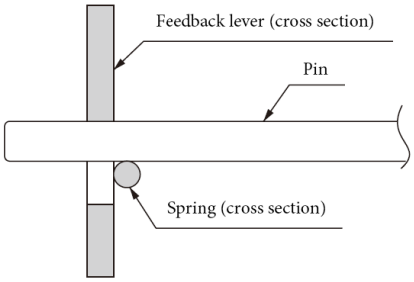

Figure 2-2. Attachment of Feedback Lever and Feedback Pin

(3) The angle between the feedback lever and pin must be 90° when viewed from above.

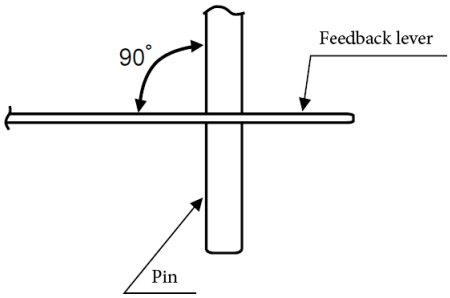

Figure 2-3. Angle between Feedback Lever and Pin

(4) The allowable rotation angle of the feedback lever is ±20° from the horizontal. If ±20° is exceeded, a major failure (VTD FAULT) will be detected by the self-diagnostics, and the device will not operate properly. (The minimum rotation angle for guaranteed accuracy is ±4°.)

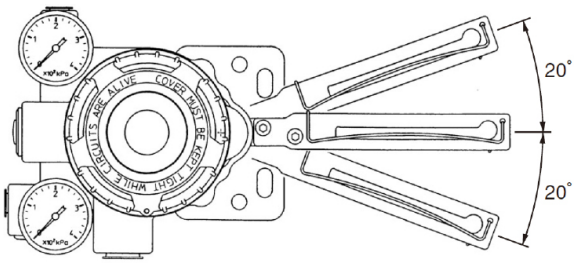

Figure 2-4. Feedback Lever Operating Angle

(5) If attaching a rotary cylinder, attach it so that the rotary cylinder shaft comes between the feedback pin and the device.

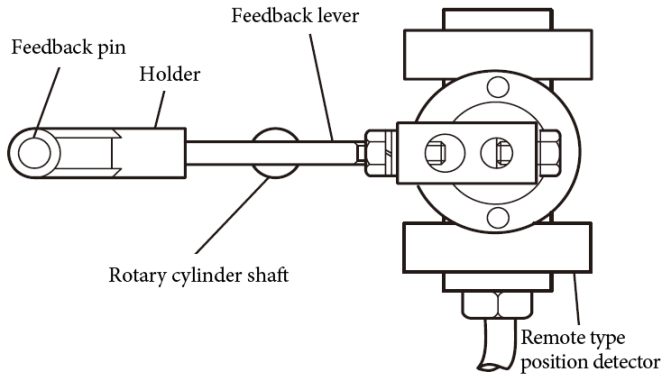

Figure 2-5. Connection of Remote Type and Rotary Cylinder's Feedback Pin and Feedback Lever

Rear maintenance space

The device has a flapper nozzle mechanism at the rear of the main unit. The device is designed such that, when cleaning the flapper, the flapper nozzle mechanism can be accessed by removing the pilot relay cover at the back of the main unit.

Before mounting the positioner on the actuator, consider a design for the mounting bracket and feedback mechanism that leaves sufficient maintenance space for the pilot relay cover, which is secured by three screws, to be removed, and for the work described above to be carried out.

2.2.2 Air piping connection

The method for supplying air to drive the actuator of this device will now be described.

Air supply system

In order to ensure safe long-term use of this device, the supply air must be clean and dry. A typical air supply system is shown in the diagram below.

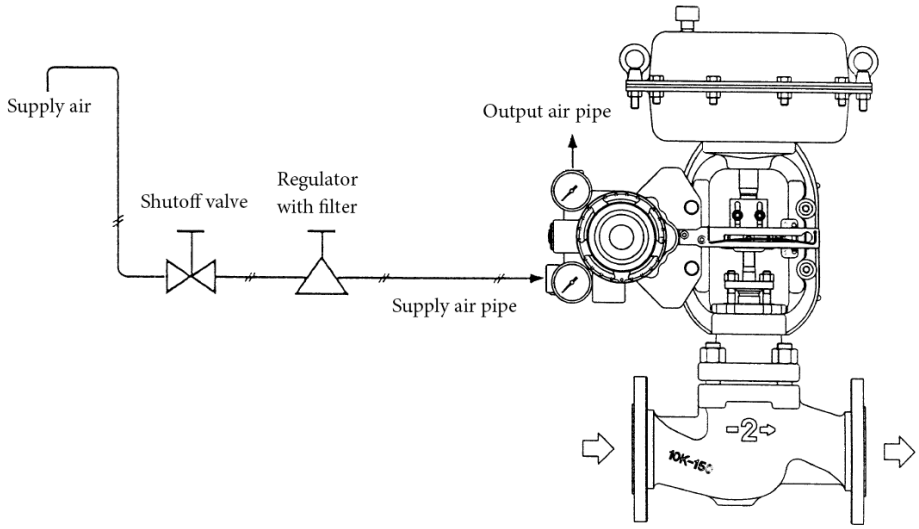

Figure 2-6. Air Supply System

Supply air

- The supply air must be clean, dry air without moisture, oil, contaminants, or foreign matter such as dust. In the air supply system, an aftercooler, air drier, filter, and the like should be installed after the compressor. Exercise caution with regard to, for example, the supply piping structure.
- Dry air refers to air which, at atmospheric pressure, has a dew point that is at least 10 °C lower than the lowest temperature in the environment in which the device is actually used. (For example, if the lowest temperature where the device is used is 0 °C, use air with a dew point of −10 °C or less as supply air.)

Pressure regulator with filter

- The regulator is used to adjust the supply air pressure to the positioner.
- Install the regulator as close as possible to the body of the positioner.
- The control valve can be operated manually by using this regulator in conjunction with the A/M switching function. (Not possible when a double-acting actuator is used.)
- Use a filter that is 3 μm or finer.
- Solid particles in the supply air can be removed by this filter.
- If the regulator is not equipped with a filter, insert a separate filter (3 μm or finer) immediately before the regulator.

Shutoff valve

- This valve is used to temporarily shut off the supply of air to the device.
- With this valve, this device or the control valve can be removed for maintenance without stopping the air supply system as a whole.

Piping

- Use pipes with an inside diameter of 6 mm.
- Pipes should be selected to fit the installation environment; for example, in a corrosive environment, use vinyl-covered copper pipes.
- Use joints that fit the pipes being used.

Connection position

The respective positions of the air supply connection and the output connection are shown in the diagram below. The dimensions of the screws for the connections can be selected based on the specifications.

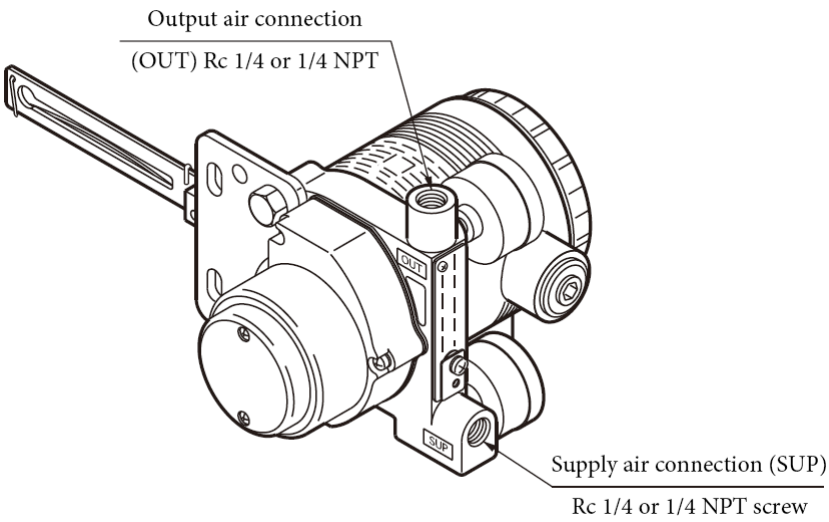

Figure 2-7. Air Piping Connection

Note

When connecting a solenoid valve, air valve, or the like for emergency cutoff, install it between the air output connection and actuator, and not on the supply air connection side of the device.

2.2.3 Handling of double-acting reversing relay

A reversing relay is used when a double-acting actuator is used.

What is a reversing relay?

The pressure (POUT2) of the reversing relay's output air (OUT2) is expressed in the following formula.

$OUT2 = P_{SUP} - OUT1$

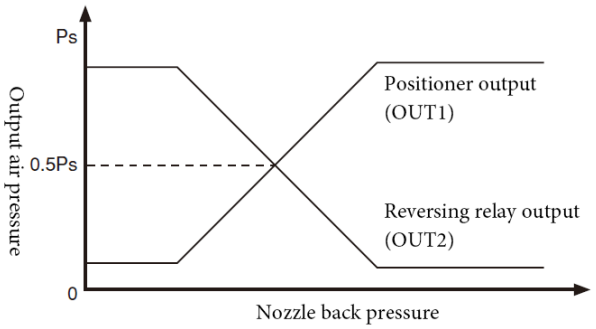

Reversing relay attachment

Detach the dustproof plug on the air piping connection.

Using sealing tape, connect the joint of the reversing relay to the output air port.

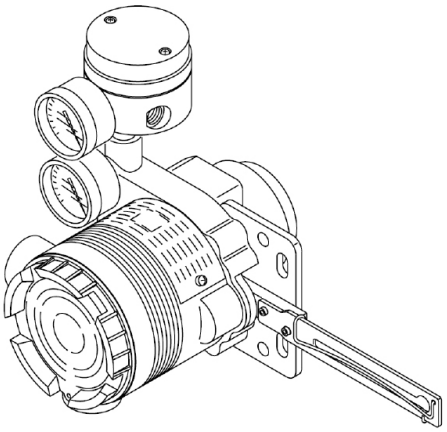

Figure 2-8. Reversing Relay Connection

Reversing relay air connection

"Air Connection" is stamped on the lower section of the reversing relay.

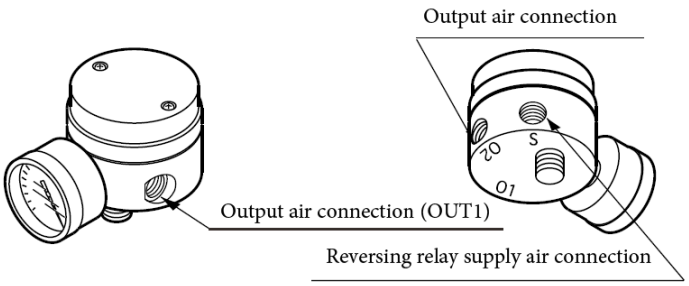

Figure 2-9. Reversing Relay Standalone View

Supply air pressure connection to reversing relay

Connect the pipe for supply air pressure to the reversing relay.

Installing the pressure regulator with filter to the body of the device

The pressure regulator with filter has two output air connections. Connect one of the output air connections on the pressure regulator with filter to the supply air connection on the body of the device using the special-purpose metal fittings, and connect the gap between other output air connection and the supply air connection (SUP) on the reversing relay using air pipes and joints.

Installing the pressure regulator with filter or other pressure regulator with filter separate from the body of the device

Using a T-connector or the like, separate the output air pressure of the pressure regulator with filter into two branches. Then, using air pipes and joints, connect one branch to the air supply connection on the body of the device, and the other branch to the air supply connection (SUP) on the reversing relay.

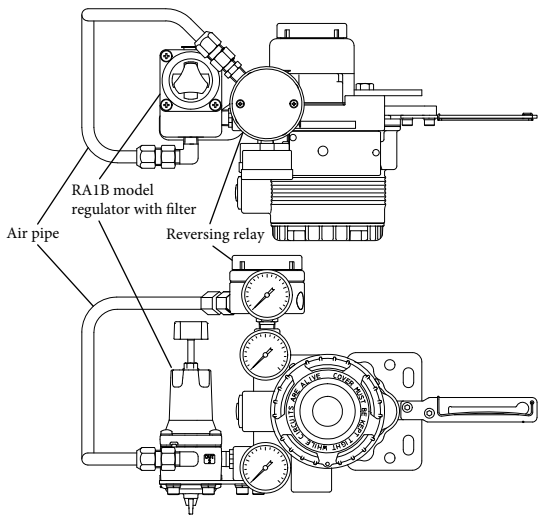

Figure 2-10-1. Air Pipe to Reversing Relay when Model RA1B Is Installed Integrally

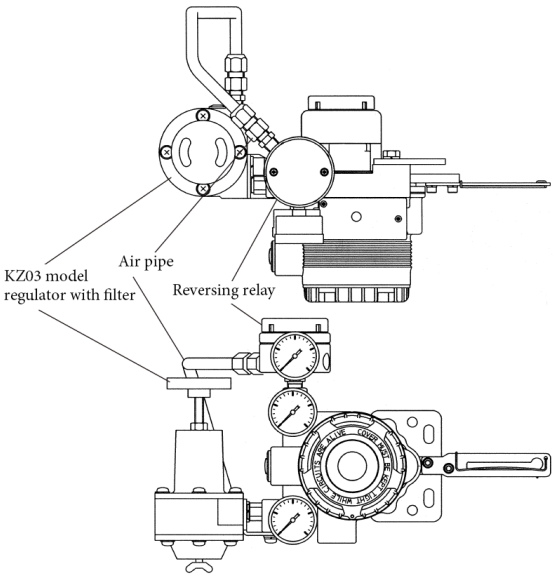

Figure 2-10-2. Air Pipe to Reversing Relay when Model KZ03 Is Installed Integrally

Note

Be sure to use branches of the output of only one regulator for the supply air to this device and reversing relay combination, and make the supply air pressure the same to both.

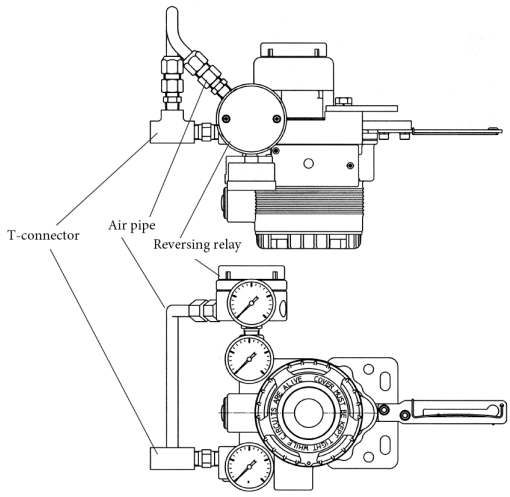

Figure 2-11. Air Pipe to Reversing Relay when Pressure Regulator Is Installed Separately

Piping procedure

The procedure for installing the air piping by which the device drives the actuator is shown below.

Step	Procedure
1	Remove the dustproof plug on the air piping connection.
2	Connect the pipe joint to the connection. **Note** • As much as possible use sealing tape rather than solid or liquid sealant. • Make sure that the sealing tape does not enter the pipes. • If liquid sealant is used, make sure that it does not drip down into the interior.
3	Connect the supply pipes and output pipes to the respective joints, taking into consideration the care and handling of the pipes. **Note** • If a reversing relay is used, connection of the actuator to output connection OUT1 or OUT2 is determined by valve action. Check valve action before connecting the pipes. • Flush the pipes sufficiently before connecting them, checking for burrs and other problems. • Make sure that the output air piping is only as long as necessary.
4	When all piping has been completed, confirm that there are no air leaks.

2.2.4 Electrical Wiring Connection

The electrical wiring methods for the signal input from the controller and the output signal to the receiver will now be described.

⚠Warning

- Be sure to perform piping work with the power supply turned off.
- Be sure to follow local electrical work guidelines when performing installation work.
- When using an explosion-proof device in a hazardous area, be sure to install pipes in accordance with Chapter 6, "Cautions Regarding Explosion-Proof Models."
- Be sure to attach blind caps to and completely close off conduit connections that are not being used.

Connection position

The terminal block of the terminal box is shown in the diagram below.

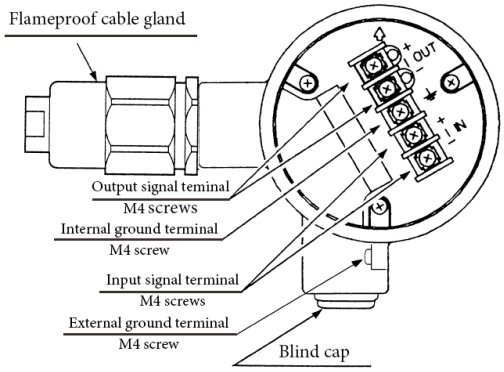

Figure 2-12. Terminal Block of Terminal Box

External ground terminal

To connect to the external ground terminal, put the cable terminal between the flat washers.

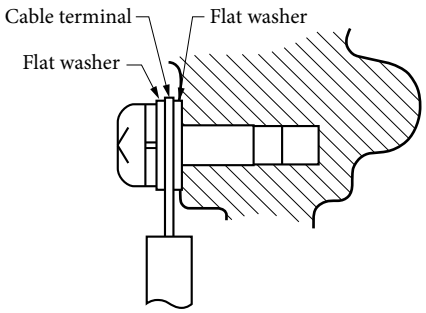

Figure 2-13. Connection to the external ground terminal

Types of electrical wiring

There are two types of electrical wiring, differing based on the purpose of the system.

- Systems that do not use a position signal (two-line connection)
- Systems that use a position signal (four-line connection)

Systems that do not use a position signal (two-line connection)

- Be sure to use either the internal or external ground terminal, following local electrical work guidelines when installing.

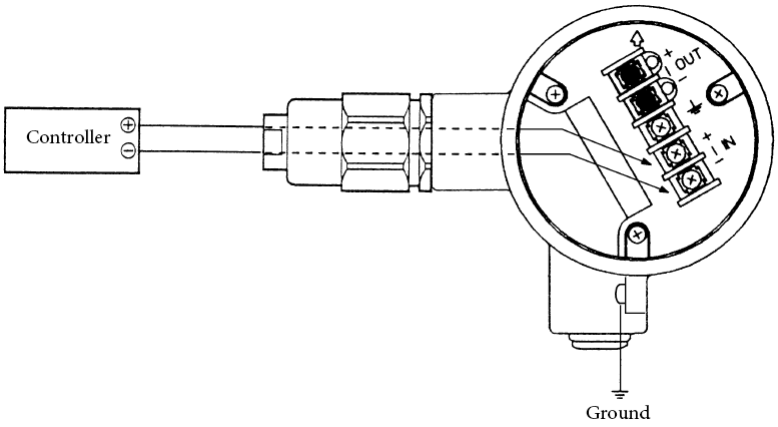

Figure 2-14. Electrical Wiring for Systems Not Using a Position Signal

Systems that use a position signal (four-line connection)

Detach the terminal box cover, and wire as shown in the diagram below.

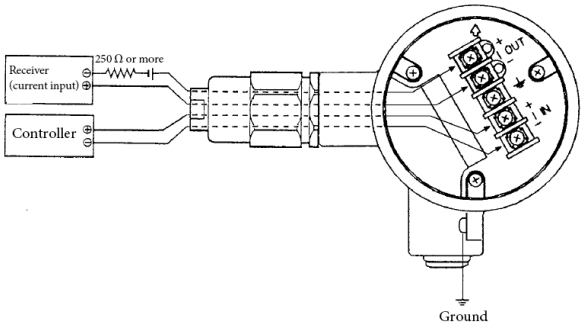

Figure 2-15-1. Wiring for Systems Using a Position Signal (Four-Line Cable)

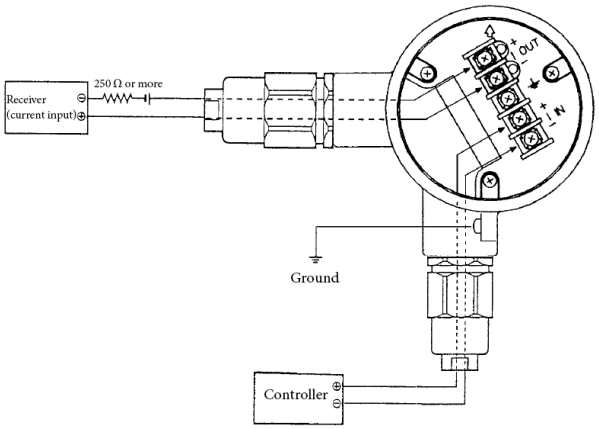

Figure 2-15-2. Wiring for Systems Using a Position Signal (Two-Line Cable)

- If the receiver is a voltage input (1 to 5 V) device, use the wiring below.

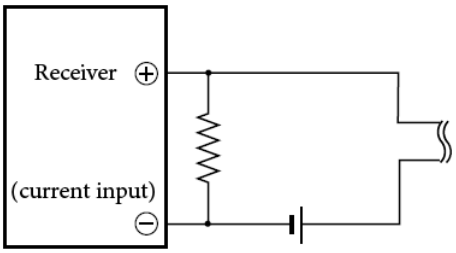

Figure 2-15-3. Wiring if Receiver is Voltage Input Device

- Be sure to use either the internal or external ground terminal, following local electrical work guidelines when performing installation work.

2.2.5 Power supply for input signal and travel transmission

Input signal

The input signal to the device is 4 to 20 mA. In addition, this input signal is used as the power supply.

Note

- Do not allow a current of 24 mA DC or higher.
- The device will not operate properly with a current of less than 3.85 mA.
- If the current drops below 3.85 mA DC, the travel transmission output might become unreliable.
- When starting from 0 mA, it may take some time until travel changes. After power is turned on, use a 3.85 mA or greater signal. In this state, response time will not be slow. On the contrary, when using a 3.85 mA or greater signal, if the flow pressure fluctuates greatly when the valve is fully closed, overshoot may occur at the first startup. To suppress overshoot, temporarily lower the input signal to 0 mA.

⚠Caution

- Do not apply excessive voltage (for example, connecting a 24 V DC power supply without resistance) to the input signal terminal. Doing so can cause the electric board to burn out, and the device to fail.

Power supply and load resistance for travel transmission

Make sure that the load resistance of the electric lines connected to the travel transmission loop, with respect to the power supply voltage used, is within the operable range shown in the diagram below.

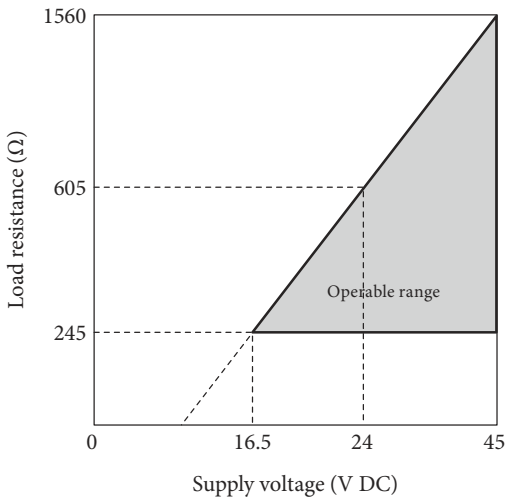

Figure 2-16. Supply Voltage and Load Resistance Characteristics

Note

Do not apply a voltage of 45 V or higher.

2.2.6 Cables (for input signal or travel transmission)

Cable selection and conditions

The selection of and conditions related to cables for wiring are described below.

- We recommend the use of CVV (JIS C 3401) 600 V control wires with PVC insulation and a conductor cross-section of 1.25 mm^2, or stranded cables with the same or better performance specifications.
- For locations that are readily affected by electromagnetic noise, use CVVS (JCS 4258) shielded wires and metal conduits.
- Select a sheath material that can withstand the cable installation environment (e.g., ambient temperature, corrosive gases, and corrosive liquids).
- Pull the cable to the terminal box through the conduit connection port (G1/2 internal thread, 1/2NPT internal thread, or M20×1.5 internal thread).
- Use cable with an outer diameter between 7 and 12 mm. If a flameproof cable gland is used, be sure to use packing that conforms to the outer diameter of the cable.
- For wire ends, we recommend the use of crimp terminals (for M4 screws) with an insulating sleeve.
- The maximum cable length is 1500 m.
- Use the appropriate remote cable for the wiring between the main unit and the valve travel detector of the remote type (model AVP200/201).

Cabling

When cabling between the device and the controller, be careful of the following items.

- When wiring, avoid sources of electromagnetic noise such as high-capacity transformers, motors, and motive power supplies. Also, do not place cables in the same tray or duct with power cables.
- For waterproofing and wire damage prevention, we recommend using conduits and ducts. In addition, be sure to use waterproof adapters at conduit connections.
- In locations that are readily affected by electromagnetic noise, use conduits and ducts.
- If shielded cables are used for wiring, as a rule ground one point on the distributed control system side.

Note

- The devices are intended for use in industrial locations defined in CE marking directive (EN 61326-1).
- A 3.5 % variation in the opening of the valve may occur around 2–4 MHz of conducted disturbances, induced by radio-frequency fields (EN 61000-4-6).
- Use the provided remote cables as the cables between the main unit and the valve travel detector of a remote type (Model AVP200/201). Regarding construction and cabling, see 2.3, “Remote Type Handling.”

Wiring procedure

The wiring procedure for operating the device is shown below.

Step	Procedure
1	Loosen the hex socket setscrew (M3) on the terminal box cover using a hexagonal wrench (1.5).
2	Remove the terminal box cover by turning it counterclockwise. **Note** • When doing this, be careful not to scratch the painted surface with a tool or the like.
3	Remove the dustproof plug on the conduit connection.
4	Insert the cable into the conduit connection. **Note** • When doing this, be careful not to scratch the cable sheath.
5	Referring to Figures 2-13, 2-14-1, and 2-14-2, run the cable to the relevant terminal in the terminal box. **Note** • Be careful not to make a mistake in polarity. • Tighten the terminal screws sufficiently. The recommended tightening torque is 1.5 N·m.
6	Sufficiently waterproof the conduit so that rainwater and the like does not penetrate inside. **Note** • We recommend the use of silicone resin based non-hardening sealant materials.
7	After attaching and sufficiently closing the terminal box cover, fix the cover in place with the hex socket setscrew. **⚠Caution** • Be careful to avoid injuring you fingers on the edges of the cover, the threads of screws on the main unit, etc. **Note** • When doing this, be careful not to scratch the painted surface with a tool or the like.

Note

Model AVP302/202 has an input resistance equivalent to 400 Ω / 20 mA DC, and the voltage between the terminals must be at least 8 V.
Model AVP300/301 intrinsically safe type is equivalent to 350 Ω, and the voltage must be at least 7 V.
Model AVP300/301/200/201 waterproof, flameproof is equivalent to 300 Ω, and the voltage must be at least 6 V.
Check the allowable load resistance and output voltage of the controller before use.
In addition, if the allowable load resistance of the controller is less than above,
use an isolator or the like.

2.3 Remote Type Handling

2.3.1 Remote type cable handling

Detaching the positioner body and cable

Step	Procedure
1	Remove the cover of terminal box on the body of the positioner.
2	Remove the five terminals connected to the remote cable.
3	Remove the watertight gland or flameproof cable gland that is attached to the terminal box on the body of the positioner.
4	Pull the remote cable out of the terminal box connection. Be careful not to damage the cable.

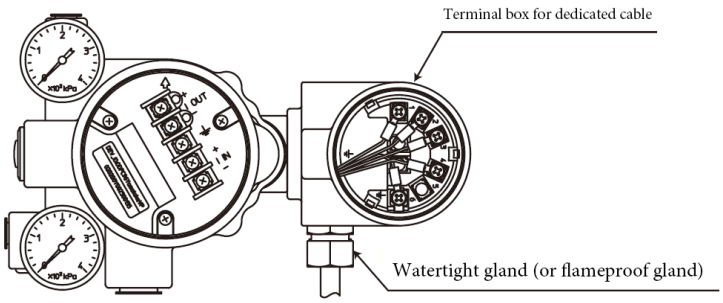

Figure 2-17. Opened Cover of Terminal Box for remote Cable

Attaching the positioner body and cable

Step	Procedure
1	Insert the remote cable into the watertight gland or flameproof cable gland.
2	Insert the remote cable into the terminal box connection on the positioner body.
3	Connect the cable and terminal as written on the rear surface of the cover of the terminal box, avoiding erroneously combining the colors and numbers of the remote cable and the terminal.
4	Correctly attach the watertight gland or flameproof cable gland to the terminal box connection. (If a conduit is to be attached, first remove the watertight gland. However, for the explosion-proof specification, do not remove the flameproof cable gland, as there is a G1/2 internal thread in the flameproof cable gland.)
5	Close the cover of the terminal box.(For the explosion-proof specification, also tighten the lock screw.)

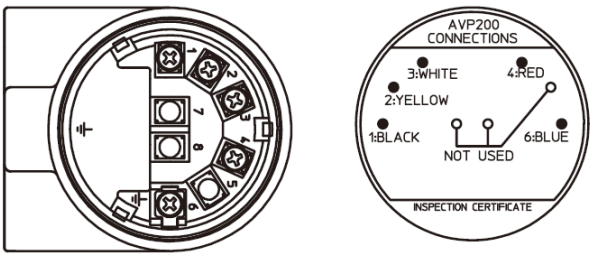

Terminal Number	Cable Color
1	Brack
2	Yellow
3	White
4	Red
6	Blue

Figure 2-18. Wiring Diagram of Terminal Box for remote Cable, and Rear Surface of Cover

Adjusting length of remote cable

Step	Procedure
1	Remove the remote cable from the terminal box, and then cut a remote cable of a suitable length.
2	Strip off about 6 cm of the sheath from the end of the cable, and strip off about 5 mm of the insulation of the wire.
3	Insert the drain wire into the heat-shrinkable tubing, and shrink the heat-shrinkable tubing by applying an appropriate amount of heat to it. (If there is no heat-shrinkable tubing, take measures so that the drain wire can be insulated from the other wires.)
4	Crimp the wires and the RAV1.25-4 crimp terminals (wire diameter 1.25 mm, M4 round crimp terminals) with an appropriate crimping tool.

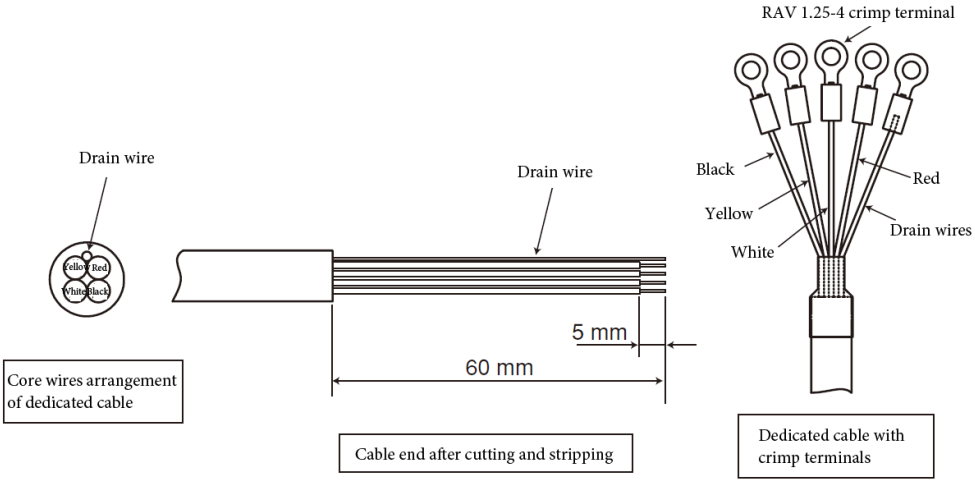

Figure 2-19. Adjusting the Length of the Cable

⚠Caution

- When connecting or disconnecting positioner body cables, do not allow contaminants, rainwater, and the like to enter the valve travel detector unit or the positioner body.
- Periodically tighten the watertight gland and flameproof cable gland. Failure to do so may allow rainwater to enter the equipment, resulting in malfunctions.
- The cable cannot be removed from the valve travel detector unit. However, the watertight gland can be removed.
- Do not remove the flameproof cable gland on the valve travel detector. Doing so could cause wires inside the cable to be broken as a result of the rotation of the cable.

2.3.2 Attachment to the actuator of the valve travel detector

Changing direction of feedback lever (optional)

Change the orientation of the feedback lever in accordance with the cable wiring orientation, the constraints of the mounting bracket, etc.

(1) Remove the lever (small) fixed to the position sensor shaft by removing the hexagonal bolt.

(2) Next, rotate the shaft of the position sensor 180°.

(3) Finally, change the orientation of the lever and screw the hexagonal bolt into the feedback lever (small) so that the lever is fastened securely in place, with the end of the hexagonal bolt in contact with the beveled part of the position sensor shaft at a right angle.

Note

Do not loosen the two bolts hex socket bolt screws that fasten the position sensor to the valve travel detector case.

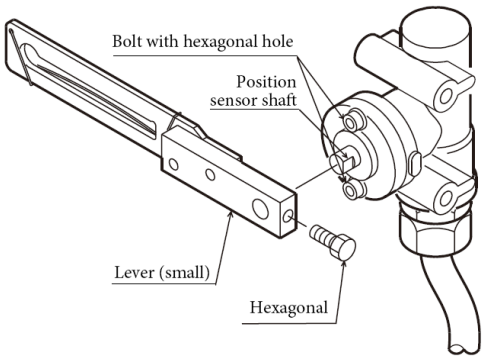

Figure 2-20. Valve Travel Detector

Attachment of valve travel detector

Attach the valve travel detector to the prescribed locations on the actuator using the mounting bracket.

Note

Do not allow the cable outlet to face upward.

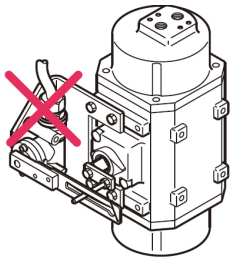

Adjustment of attachment positions

Set the position of the control valve to 50 % by manual operation of, for example, the positioner or the actuator manual handle. Next, adjust the mounting position of the feedback pin and that of the valve travel detector such that the central vertical axis of the valve travel detector reaches a 90° angle to the feedback lever.

Referring to 2.2, “Installation Method,” in this document, make sure that the feedback pin is properly clamped between the feedback lever and the spring. Finally, fasten the valve travel detector securely to the mounting bracket using the hexagonal bolts and washers provided.

2.3.3 Positioner body installation

Positioner body installation

Using the special-purpose mounting bracket, attach the main unit of the positioner to the 2B stanchion.

Note

Install the positioner body in a location where it will not be subjected to severe vibration. Also, for the integral type regulator, install it such that the drain of the regulator is facing downward.

If it is not possible for the drain to face downward, use the regulator separately.

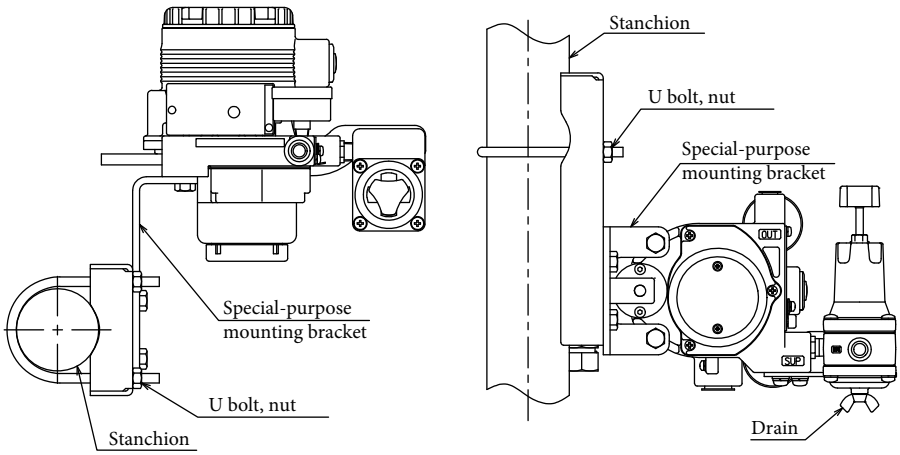

Figure 2-21. Positioner Body Installation

2.3.4 Cabling between valve travel detector and positioner body

When attaching cabling between the valve travel detector and the positioner body, take into account the operation of the control valve, the operation of the equipment, the safety of the workers, etc., and ensure that none of these is affected.

Note

Avoid construction methods and installation methods which place the weight of the valve travel detector and positioner body directly on the cable.

If, due to the relative mounting positions, this cannot be avoided, consider taking measures such as securing the cable to a nearby post.

If the cable goes upward, in order to prevent rainwater from entering the cable, first run it downward and then turn it upward.

Perform cabling in accordance with electrical equipment technical standards.

The cable between the remote type valve travel detector and the body of the device can be cut to any desired length and then adjusted.

Cable length adjustment must be performed by trained service personnel from Azbil Corporation, using special-purpose tools. If cable length adjustment is to be performed, be sure to consult with Azbil Corporation.

2.4 Flameproof Cable Gland and Explosion-proof Universal Elbow

Introduction

If the TIIS flameproof model has been purchased, it will be delivered with the flameproof cable gland included.

The flameproof cable gland is used to seal the end of the cable, ensuring explosion-proof performance and improving insulation performance and mechanical strength. When using it, if the orientation of the cable needs to be changed, use the flameproof elbow.

The flameproof cable gland to use differs depending on the TIIS explosion-proof certification number. Check the TIIS explosion-proof certification number on the nameplate.

Structure of flameproof cable gland: certification Nos. TC22692X and TC22723X

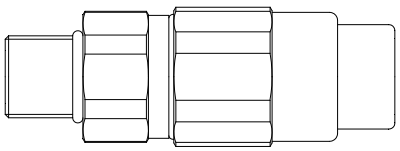

Figure 2-22. Flameproof Cable Gland Full View

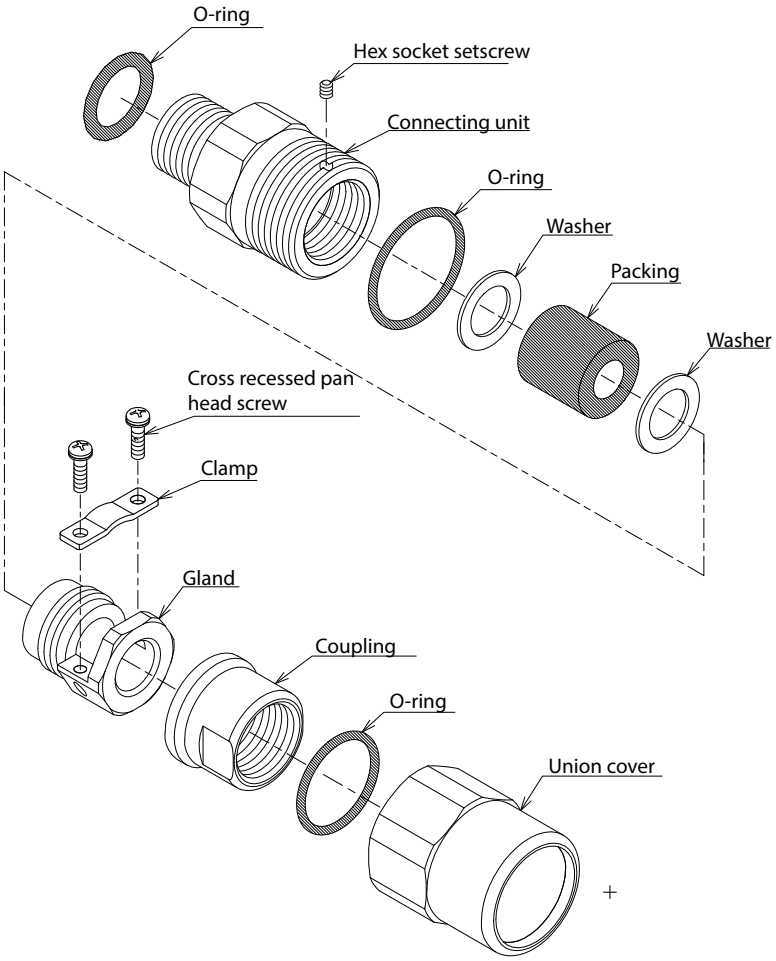

Figure 2-23. Flameproof Cable Gland Exploded View

Structure of flameproof cable gland: certification No. TC17094

A full view and exploded view of the flameproof cable gland are shown below.

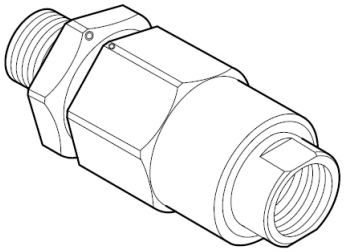

Figure 2-24. Flameproof Cable Gland Full View

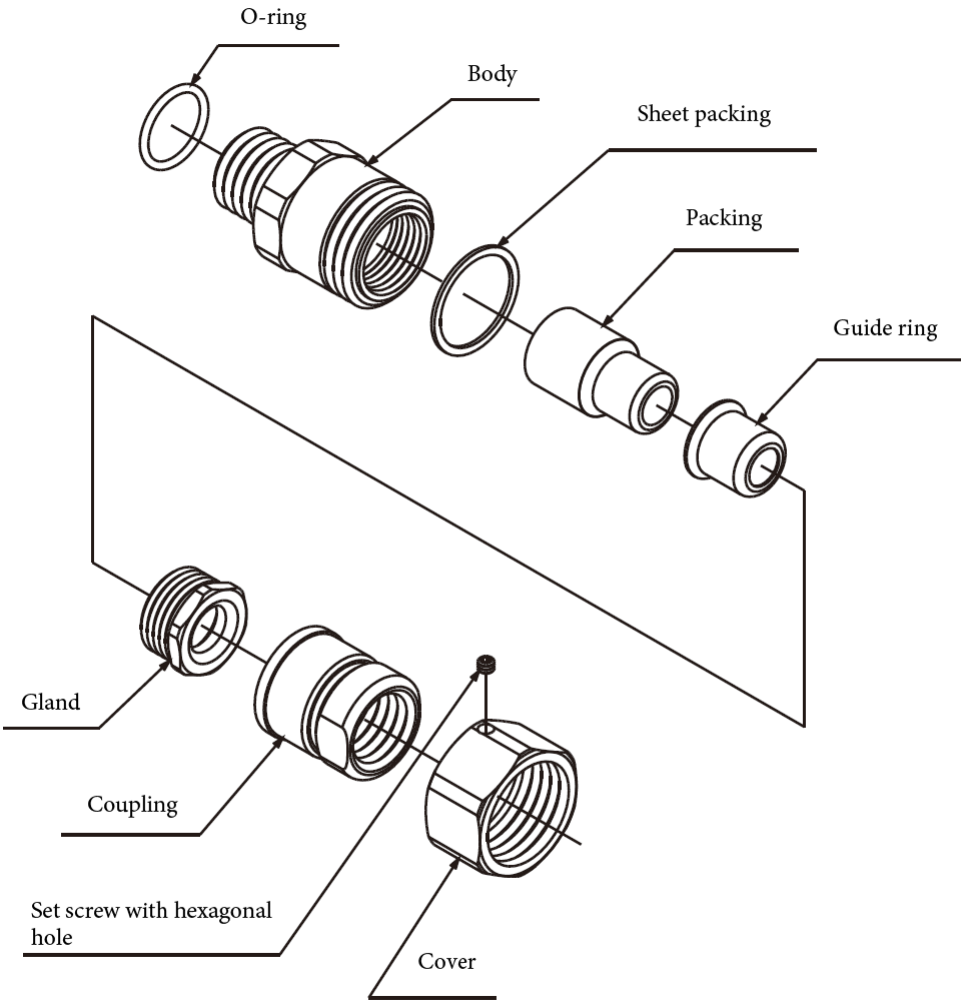

Figure 2-25. Flameproof Cable Gland Exploded View

Structure of explosion-proof universal elbow

The structure of the explosion-proof universal elbow is shown below.

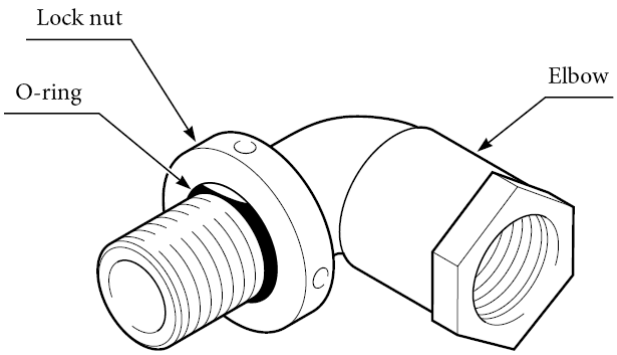

Figure 2-26. Explosion-proof Elbow Structure

Installation examples

The flameproof cable gland and flameproof elbow are mounted on the conduit connection of the terminal box, as shown in the diagrams below.

[If the flameproof cable gland is used]

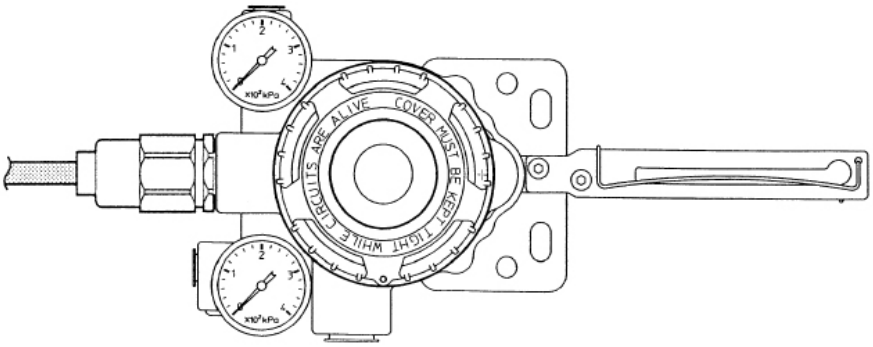

[If the explosion-proof universal elbow is also used]

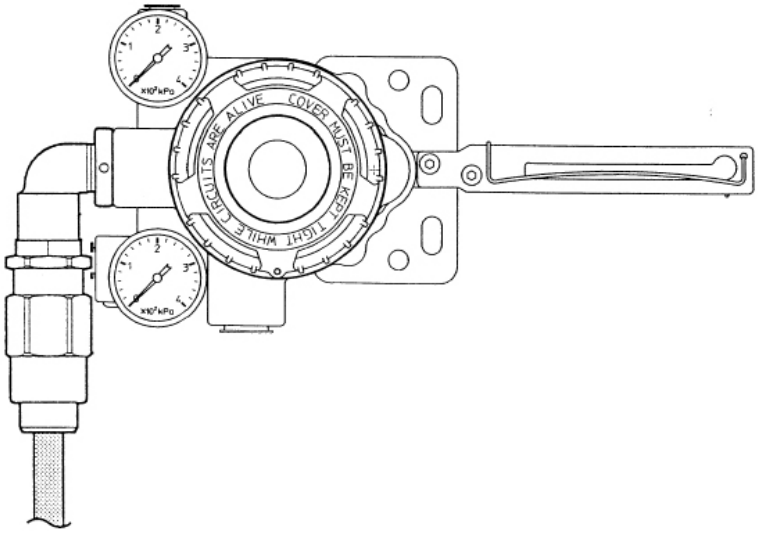

Figure 2-27. Flameproof Cable Gland and Flameproof Universal Elbow Installation Examples

Flameproof cable gland installation procedure for certification Nos. TC22692X and TC22723X

The procedure for mounting the flameproof cable gland is shown below.

Step	Procedure
1	Securely screw the connecting unit into the conduit connection port of the terminal box or into the explosion-proof universal elbow. **Note** • Apply adequate waterproofing to these parts. We recommend the use of silicone resin based non-hardening seal materials. Do not use grease that contains mineral oil.
2	Refer to the illustrations and insert the cable carefully. **⚠Warning** • If the diameters of the cable and the packing do not match each other, the propagation of flame cannot be prevented. Refer to the table below and select a packing adaptor whose internal diameter matches the outer diameter of the cable. • When replacing the packing, write the inner diameter of the new packing on the included packing diameter label, and affix the new label over the existing label. **Note** • Pay attention to the surface of the device. Tools may cause damage the surface.
3	Pass the cable through the connecting unit and insert it into the terminal box.
4	Firmly tighten the gland to the connecting unit, and then tighten the hex socket setscrew to the connecting unit. **⚠Warning** • To prevent injuries due to a spark travel, be sure to tighten down the packing adequately.
5	Tighten the clamp with the screws to secure the cable.
6	Insert the coupling into the union cover, and tighten it firmly to the connecting unit.

Cable Outer Diameter (mm)	Packing Inner Diameter (mm)	Notes
7.0 to 8.0	8	Provided
8.1 to 9.0	9	Provided
9.1 to 10.0	10	Built in
10.1 to 11	11	Provided
11.1 to 12.0	12	Provided

■ *Flameproof cable gland installation procedure for certification No. TC17094*

The flameproof cable gland installation procedure is shown below.

<table>
<tr><th>Step</th><th>Procedure</th></tr>
<tr><td>1</td><td>Securely fasten the body to the terminal box connection or the universal elbow connection.

Note
• Apply adequate waterproofing to these parts. We recommend the use of silicone resin based non-hardening sealant materials.</td></tr>
<tr><td>2</td><td>Refer to the illustrations and insert the cable carefully.

⚠Warning
• If the respective diameters of the cable and the packing do not match, it may not be possible to prevent flames from escaping and causing personal injury. Referring to the table below, select packing that has an internal diameter that is appropriate for the outer diameter of the cable.
<table>
<tr><th>Cable Outer Diameter (mm)</th><th>Packing Inner Diameter (mm)</th><th>Notes</th></tr>
<tr><td>7.0 to 8.0</td><td>8</td><td>Provided</td></tr>
<tr><td>8.1 to 9.0</td><td>9</td><td>Provided</td></tr>
<tr><td>9.1 to 10.0</td><td>10</td><td>Built in</td></tr>
<tr><td>10.1 to 11.0</td><td>11</td><td>Provided</td></tr>
<tr><td>11.1 to 12.0</td><td>12</td><td>Provided</td></tr>
</table></td></tr>
<tr><td>3</td><td>Fit the gland onto the guide ring and tighten it to fasten it in place.

⚠Warning
• To prevent injuries from escaping flame, be sure to tighten the packing sufficiently.</td></tr>
<tr><td>4</td><td>Insert the end of the cable into the terminal box.</td></tr>
<tr><td>5</td><td>Screw the cover onto the body and tighten it securely to hold it in place, and then tighten the hex socket setscrew on the cover.</td></tr>
</table>

Flameproof universal elbow installation procedure

The installation procedure for the flameproof universal elbow is shown below.

Step	Procedure
1	Referring to the diagram below, position the lock nut so that its edge is aligned with the edge of the groove for the O-ring. 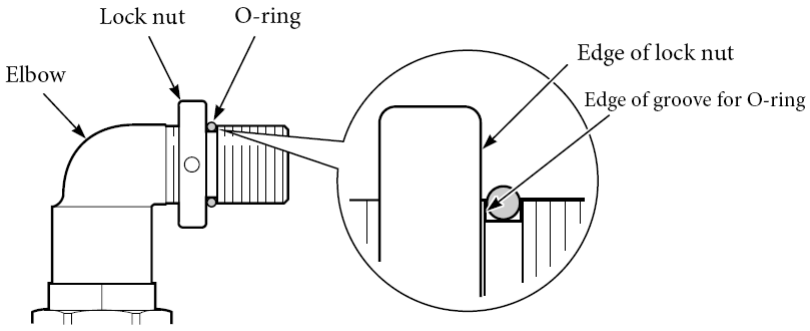 Figure 2-28. Alignment of Lock Nut Edge and O-Ring Groove Edge
2	Screw the flameproof universal elbow into the terminal box conduit connection until the lock nut meets the conduit connection. **Note** • Apply adequate waterproofing to these parts.
3	Turn the flameproof universal elbow in the direction that loosens it until it is in the desired direction. **Note** • Do not loosen the elbow by more than one turn.
4	Tighten the lock nut using the special-purpose tool.

Cable-pulling equipment for non-TIIS explosion-proofing

When using this device after it has received explosion-proofing certification other than TIIS explosion-proofing, carry out cable-pulling work in accordance with local guidelines for electrical wiring work.

Chapter 3: Operation

Overview of this chapter

This chapter describes starting and stopping the device, as well as zero/span adjustment. If you have purchased this device separately, be sure to read Chapter 2, "Installation," before reading this chapter.

Cautions to ensure safe operation

⚠ Warning
Do not perform wiring work, turn on the electricity, etc., when your hands are wet. There is a risk of electric shock. Perform this work with the power supply turned off, and with dry or gloved hands.
When wiring in a hazardous area, work according to the methods prescribed by the guidelines for the hazardous area.
For flameproof explosion-proof specifications, do not under any circumstances open the cover during operation (when powered up).

⚠ Caution
After installing the device, do not place your body weight on it, use it as a scaffold, etc. There is a risk that it could fall over.
Do not touch the device unnecessarily while it is in operation. Depending on the environment in which the device is used, there is a danger that the surface of the device may be very hot or very cold.
When opening the cover of the terminal box, be careful of the edges of the cover, the threads of the screws on the main unit, etc. There is a possibility of injury.
Use a DC power supply that has overload protection. An overload can cause the emission of smoke and fire.
Bringing tools and the like into contact with the glass portion of the display can cause damage or injury. Exercise sufficient caution. In addition, be sure to wear safety glasses.
As this product is extremely heavy, watch your footing, and be sure to wear safety shoes.
When the device is in operation, do not touch moving parts such as the feedback lever. Your hand may become caught, resulting in injury.
Supply power correctly based on the specifications. An incorrect power input can damage the instrument.
When working in a high-temperature or low-temperature environment, wear gloves and other protective equipment.
Do not bring magnets or magnetic screwdrivers near the device. There is a possibility that the control valve will move in response.

3.1 Auto-setup

Before using this device, run auto-setup. After that, if necessary adjust the fully closed position (zero) and fully open position (span) that delineate valve travel.

The device's zero/span adjustment function electrically sets the valve closed and open positions independently, and is thus capable of performing this adjustment without mutual interference.

The auto-setup method that uses an external zero/span adjusting mechanism will now be described.

Note

After auto-setup is complete, be sure to confirm valve action, including for instance opening and closing, by varying the input signal.

The device provides the following two operating modes. (This assumes that the software is version 3.5 or higher; for previous versions, only the fast-response priority mode is implemented.)

- Stability priority mode: mode that gives priority to stability, with little overshoot.
- Fast-response priority mode: mode that gives priority to fast response; use this mode with a double-acting actuator.

This setting is switched based on the forced fully closed setting, so be sure to change the operating mode as necessary.

- Forced fully closed setting < 0.55 % input signal: stability priority mode
- Forced fully closed setting ≥ 0.55 % input signal: fast-response priority mode

External zero/span adjustment unit structure

The structure of the external zero/span adjustment unit is shown in the figure below.

This method can also be used when the setup device cannot be used (when the terminal box cannot be opened), such as in cases in which the device is used in a hazardous area.

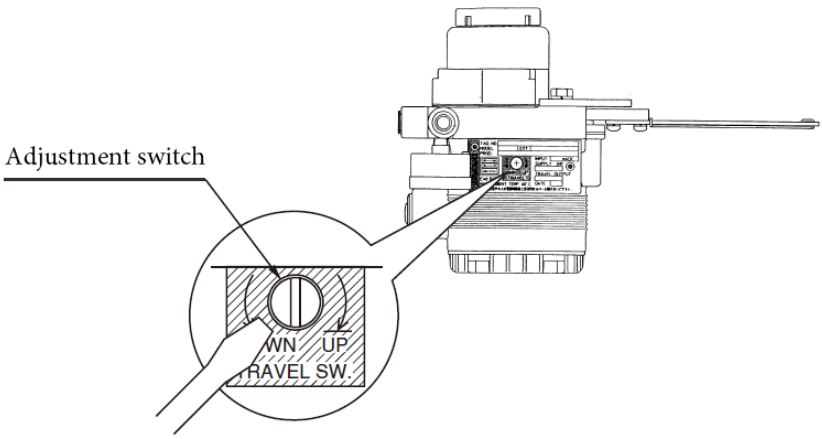

Figure 3-1. External Zero/Span Adjustment Unit Structure

3.1.1 Overview of auto-setup

Use this procedure to automatically set the following items.

(1) Zero/span adjustment
(However, by default the span point is set so that the overstroke becomes 10 %. If a span adjustment is done after auto-setup, the device changes and saves the overstroke setting.)

(2) Configuration of actuator operation

(3) Configuration of the LRV (lower range value, the input signal at 0 %) and URV (upper range value, the input signal at 100 %) of the input signal

- If actuator operation is reverse operation: LRV = 4 mA, URV = 20 mA
- If actuator operation is direct operation: LRV = 20 mA, URV = 4 mA

(4) Configuration of actuator size (Param)

(5) Configuration of hysteresis difference (Hys)
(Set the gland packing hysteresis difference from among three types: LIGHT, MEDIUM, and HEAVY.)

(6) Travel transmission burnout (fail safe) direction setting

⚠Warning

- During auto-setup the valve moves from fully closed to fully open. Take appropriate measures beforehand to ensure that the movement of the valve will not cause injury or have an effect on the process.

3.1.2 Auto-setup operation

Step	Procedure
1	Set the valve action parameter (direct or reverse). Refer to table 3-1 or 3-2 for the valve action. For the method of changing the setting, refer to 4-4-3, "Valve system." (The setting is "Direct" when the product is shipped.)
2	Set the input signal to the device to 18 ±1 mA DC.
3	Using a flat-blade screwdriver, turn the external zero/span adjustment screw in the upper part of the case 90° clockwise (counter-clockwise for Azbil Corporation's VR and RSA actuators for VFR type control valves), and hold that position for three seconds. If the valve then starts to move in the direction that releases actuator air pressure, the auto-setup process has begun, so remove the screwdriver.
4	The valve alternates between fully closed and fully open two times. It then moves to the vicinity of the 50 % open position. This takes approximately 3 to 4 minutes.
5	When the input signal becomes able to control the valve, the auto-setup operation ends. After the operation ends, hold the input signal at 4 mA or higher for 30 seconds so that the settings are written to non-volatile memory.

Note

- While auto setup is running, do not set the input signal below 4 mA. (As long as the signal is in the 4 to 20 mA range, changing it will not cause any problems.)
- Do not use a magnetic screwdriver, as this may prevent the function from operating.
- After the operation has completed, vary the input signal and confirm that the corresponding position results. If the span position has shifted, adjust the span. (See 3.2, "External zero/span adjustment.")
- In some cases, configuration may not succeed due to the actuator's diaphragm capacity (if lower than with Azbil Corporation's HA1 type actuator, which has a diaphragm capacity of 850 cm^3) or operation stroke (if less than 14.3 mm). If this occurs, refer to 4.4.4, "Control parameter configuration," and manually adjust the dynamic characteristics.
- Even if actuator size or valve size is the same, depending on the combination of devices, the default settings at the time of factory shipment are not always the same. Check how the device operates after installation and adjust the settings if necessary.
- After executing auto-setup, the forced fully open setting (see 4.4.7, "Forced fully open/closed setting,") may be changed. If necessary, reconfigure the forced fully open value.
- When an Azbil Corporation VFR type control valve is configured by turning the external zero/span adjustment switch in the counter-clockwise (DOWN) direction, the actuator size is set to PARAM7-9, and the feedback lever is set to 0 % upward travel and 100 % downward travel.
- If the booster relay is incorporated, there is a possibility of hunting during auto-setup, so either adjust the booster's sensitivity or refer to 4.4.4, "Control parameter configuration," and manually adjust the dynamic characteristics.
- If a speed controller is incorporated, set it to full open and execute auto-setup. Then, adjust the speed with the speed controller.
- If the device is purchased separately, its initial settings are set to those in the list of default values in 5.7, "List of Default Internal Data Values." Because the default actuator direction is reverse, the device will not work as is if mounted on the direct actuator.

- Before operation, be sure to execute auto-setup and be sure that the device is configured appropriately.

Table 3-1. Integral type setting

Lever Movement	Valve Direction	Setting ValveAction
Up → Down 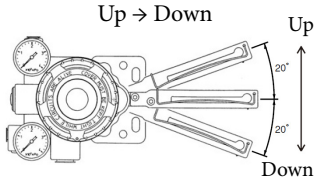	Closed → Open	Reverse
	Open → Closed	Direct

Table 3-1. Remote Type settings

Valve travel	Direction position	Lever Position	Lever Movement	Valve direction	Setting Valve Action
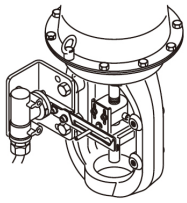	Front	Right	Up → Down	Closed → Open	Reverse
			Up → Down	Open → Closed	Direct
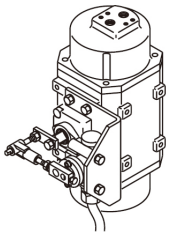	Rear	Left	Up → Down	Closed → Open	Reverse
			Up → Down	Open → Closed	Direct
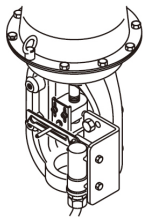	Front	Left	Up → Down	Closed → Open	Direct
			Up → Down	Open → Closed	Reverse
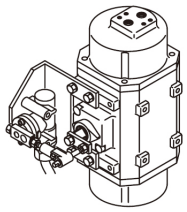	Rear	Right	Up → Down	Closed → Open	Direct
			Up → Down	Open → Closed	Reverse

3.2 Zero/Span Adjustment

The zero/span adjustment method that uses an external zero/span adjusting mechanism will now be described.

[Adjustment Method]

The zero/span adjustment screw functions as an on/off switch. When rotated 90° clockwise, the UP switch turns on, when rotated 90° counterclockwise, the DOWN switch turns on, and when returned to the original position, both switches turn off. Adjust the position by repeatedly turning this switch on and off. The position of the feedback lever is stored when the switch is turned off. Since zero point and span point adjustments do not interfere with each other, these can be adjusted independently.

The operation of the external zero/span adjustment unit is shown below.

[Adjustment Direction]

When the adjustment screw is turned in the clockwise direction, the feedback lever moves in the upward direction.

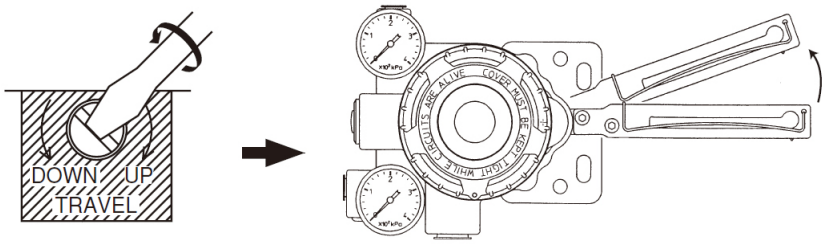

Figure 3-2-1. Adjusting the Lever in the Upward Direction

When the adjustment screw is turned in the counterclockwise direction, the feedback lever moves in the downward direction.

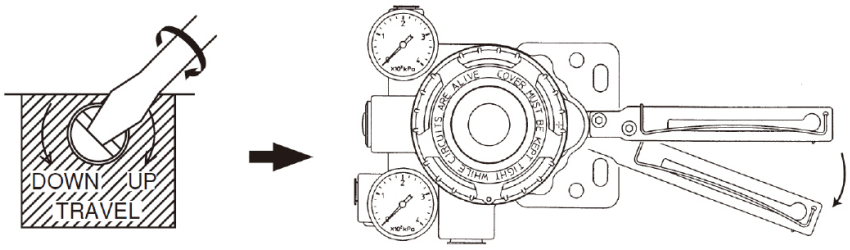

Figure 3-2-2. Adjusting the Lever in the Downward Direction

Note

- The external zero/span adjustment mechanism uses a magnet to turn a reed switch on and off.
- Do not use a magnetic screwdriver, as this may prevent the function from operating.
- The external zero/span adjustment function determines, based on the input signal, whether a valve fully open position (span) adjustment or a valve fully closed position (zero) adjustment is to be performed. If the input signal is not within a range of ±1 mA of the electric current setting values that correspond to the valve open and closed positions, this function will not operate.

3.2.1 Procedure to adjust valve to fully closed position (zero point)

The procedure to adjust the valve to the fully closed position (zero point) is shown below.

Step	Procedure
1	Input from a controller (constant-current supply) the preset electric current in the amount that corresponds to the valve being fully closed. (Example: 4 mA)
2	Adjust the fully closed position of the valve by turning the adjustment screw in the clockwise or counterclockwise direction. See Figure 3-2-1 or Figure 3-2-2 regarding adjustment direction. (If the forced fully closed function is operating, the valve will not move. To change the forced fully closed setting, see 4.4.7, "Forced fully open/closed setting." The default value is 0.5 %.)

3.2.2 Procedure to adjust valve to fully open position (span point)

The procedure to adjust the valve to the fully open position (span point) is shown below.

Step	Procedure
1	Input from a controller (constant-current supply) the preset electric current in the amount that corresponds to the valve being fully open. (Example: 20 mA)
2	Adjust the fully open position of the valve by turning the adjustment screw in the clockwise or counterclockwise direction. See Figure 3-2-1 or Figure 3-2-2 regarding adjustment direction.

Note

- After valve fully open/closed position (zero/span) adjustment, vary the input signal and confirm that the corresponding position results.
- After adjustment ends, hold the input signal at 4 mA or higher for 30 seconds so that the position settings are written to non-volatile memory.
- If a span adjustment is performed after auto-setup has been executed, the forced fully open value will be automatically set to −1 % of the overstroke. If necessary, reconfigure the forced fully open value.

3.3 Starting Operation

3.3.1 Pre-operation confirmation

Confirmation procedures

The configuration data confirmation procedure is shown below.

Check the following before starting operation.

- The device is installed appropriately, and there is no damage or breakage to the feedback lever, feedback pin, etc.
- The air supply system has been completed and the appropriate supply air pressure is being supplied (there are no air leaks).
- The input signal (4 to 20 mA DC) is being applied.

(1) Operation confirmation procedure

The operation confirmation procedure for this device is shown below.

Step	Procedure
1	Vary the input signal from the controller (constant-current supply) and confirm that the position of the control valve changes according to the set characteristics. If the system does not operate correctly, see “Troubleshooting.”
2	After confirming proper operation, restore the electrical wiring to its original state and tighten the terminal box cover firmly.

(2) Data confirmation method when communication with a setup device has been established

EPM (electro-pneumatic module) operation confirmation procedure

The operation confirmation procedure for the EPM is shown below.

Step	Procedure
1	Set the input signal from the controller (constant-current supply) to a value that results in an actual opening position of 50 %.
2	Referring to 4.3.1, "Measured value confirmation," confirm that the drive signal of the process variables is 50±25 %. **⚠Caution** • If the above conditions are not satised, the EPM balance adjustment is o. Consequently, EPM balance adjustment is necessary. If EPM balance adjustment is not performed appropriately, the valve position may vary suddenly and damage the EPM, so be sure to have this adjustment carried out by Azbil Corporation service personnel, or by a representative who has received Azbil Corporation training.

Self-diagnostic results confirmation procedure

The procedure for confirming self-diagnostic results is shown below.

Step	Procedure
1	Set the input signal from the controller (constant-current supply) to a value that results in an actual opening position of 50 %.
2	Referring to 4.8, "Self-diagnostics," perform the self-diagnostics and confirm that the diagnostics pass. If not, refer Chapter 5, "Troubleshooting," and take the appropriate measures.

3.3.2 Starting operation

Introduction

This device and the control valve form a manipulator which is used in process control. Always take adequate safety precautions when starting to operate the control valve using this device.

Note

If an explosion-proof device model is used in a hazardous area, pay particular attention to how well electrical wiring connections (adapters, blind caps, etc.), covers, and the like are tightened down.

Confirm the following points before starting operation.

Confirmation procedures

The confirmation procedure is shown below.

Step	Procedure
1	Confirm that the device is installed correctly. Confirm that no mechanical interference results from the movement of the control valve.
2	Confirm that electrical wiring of the device has been performed correctly, and that the air supply piping of the device has been performed correctly (and that there are no air leaks).
3	Confirm that the valve operates as configured according to the input signal. After the above items have been completed, operation of the device and control valve can be started.

3.3.3 Stopping operation

Stopping operation

The procedure for stopping operation is shown below.

Step	Procedure
1	Stop operation of the process. (Move each valve to the air fail position.)
2	If travel transmission output is used, set the host system control mode to manual.
3	Turn off the input signal (power supply) to the device.
4	Turn off the air supply to the device. **Note** If the device is installed in an adverse environment, for example in a corrosive atmosphere, we recommend not turning off the air supply, in order to prevent corrosive gases from entering the device.

Chapter 4: Communication-Based Operation

Overview of this chapter

This chapter describes operations that are performed using communication.

Refer to this chapter for information regarding the basics of operations, the relationship between modes and data settings, data setting and modification, the saving of various types of data, etc.

4.1 Starting Communication

Before starting communication

Confirm the following points before starting communication.

- Electrical wiring of the device is completed (see the “Wiring method” below).
- There is an input signal from the controller (constant-current supply).

Note

If there is no 4 to 20 mA DC signal from the controller, connect a constant-current supply (3.85 to 21.5 mA DC) to the input signal terminal. When doing so, be sure to remove the wires coming from the controller off of the terminals.

Wiring method

Introduction

The wiring method for communicating with this device will now be described.

- ***With HART communication***

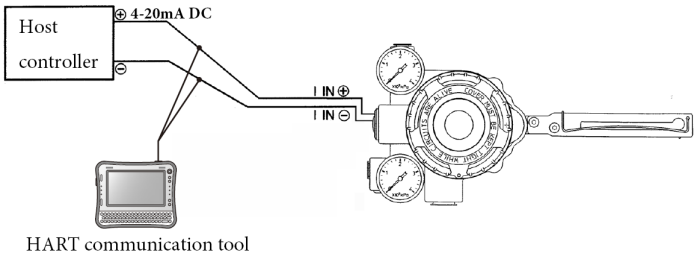

Figure 4-1. Wiring of HART Communication Tool (Models AVP302/202)

- ***With SFN communication***

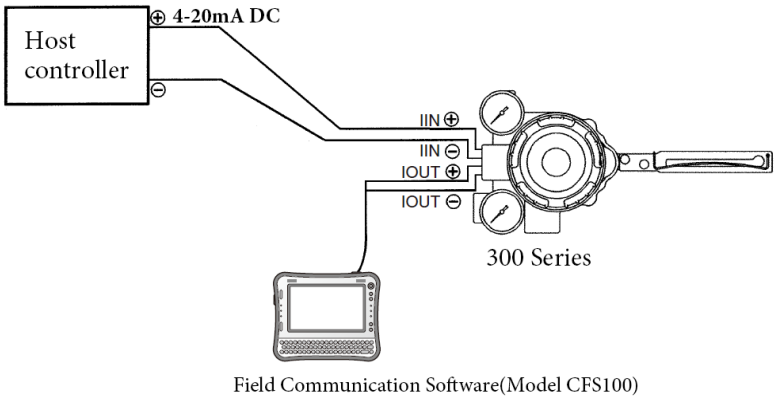

Figure 4-2. Wiring with Field Communication Software(Model CFS100) (Models AVP300/200)

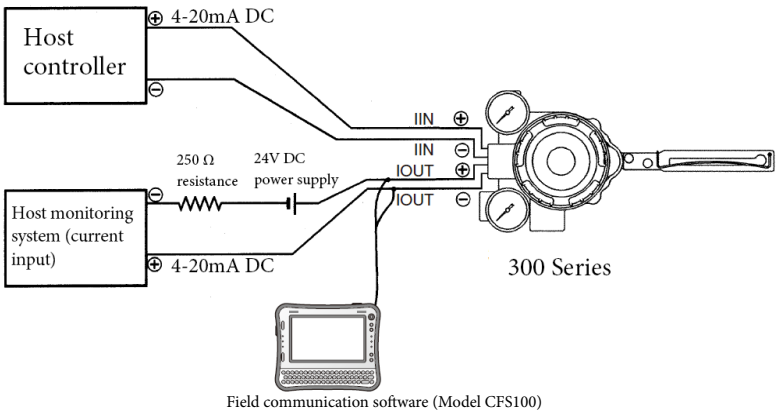

Figure 4-3. Using the Travel Transmission Function (Model AVP301/201)

4.2 Communication-Based Operation

Operations such as adjustment and configuration of the device and reading on the device will now be described with reference to the menus of the Field Communication Software(Model CFS100) . Regarding operating methods, see the Field Communication Software(Model CFS100) Smart Positioner Edition Operating Manual (No. CM2-CFS100-2010).

By communicating with this device, the following can be performed.

- ***4.3 Operation Data Confirmation***
  - 4.3.1 Measured value confirmation
  - 4.3.2 Adjustment data confirmation
- ***4.4 Device Configuration and Adjustment***
  - 4.4.1 Auto-setup
  - 4.4.2 Zero/span adjustment
  - 4.4.3 Control valve system configuration
  - 4.4.4 Control parameter configuration
  - 4.4.5 Input signal range configuration
  - 4.4.6 Flow rate characteristics configuration
  - 4.4.7 Forced fully open/closed setting
- ***4.5 Device Information Confirmation and Modification***
  - 4.5.1 Device information/production number confirmation and modification
  - 4.5.2 Device software revision information confirmation
- ***4.6 Maintenance***
  - 4.6.1 Mode modification
  - 4.6.2 Input signal calibration
  - 4.6.3 Dummy input signal
  - 4.6.4 Dummy EPM drive signal
  - 4.6.5 Configuration data saving
  - 4.6.6 Saved configuration data retrieval
- ***4.7 Valve Diagnostic Parameter Configuration***
- ***4.8 Self-diagnostics***

Menu Tree

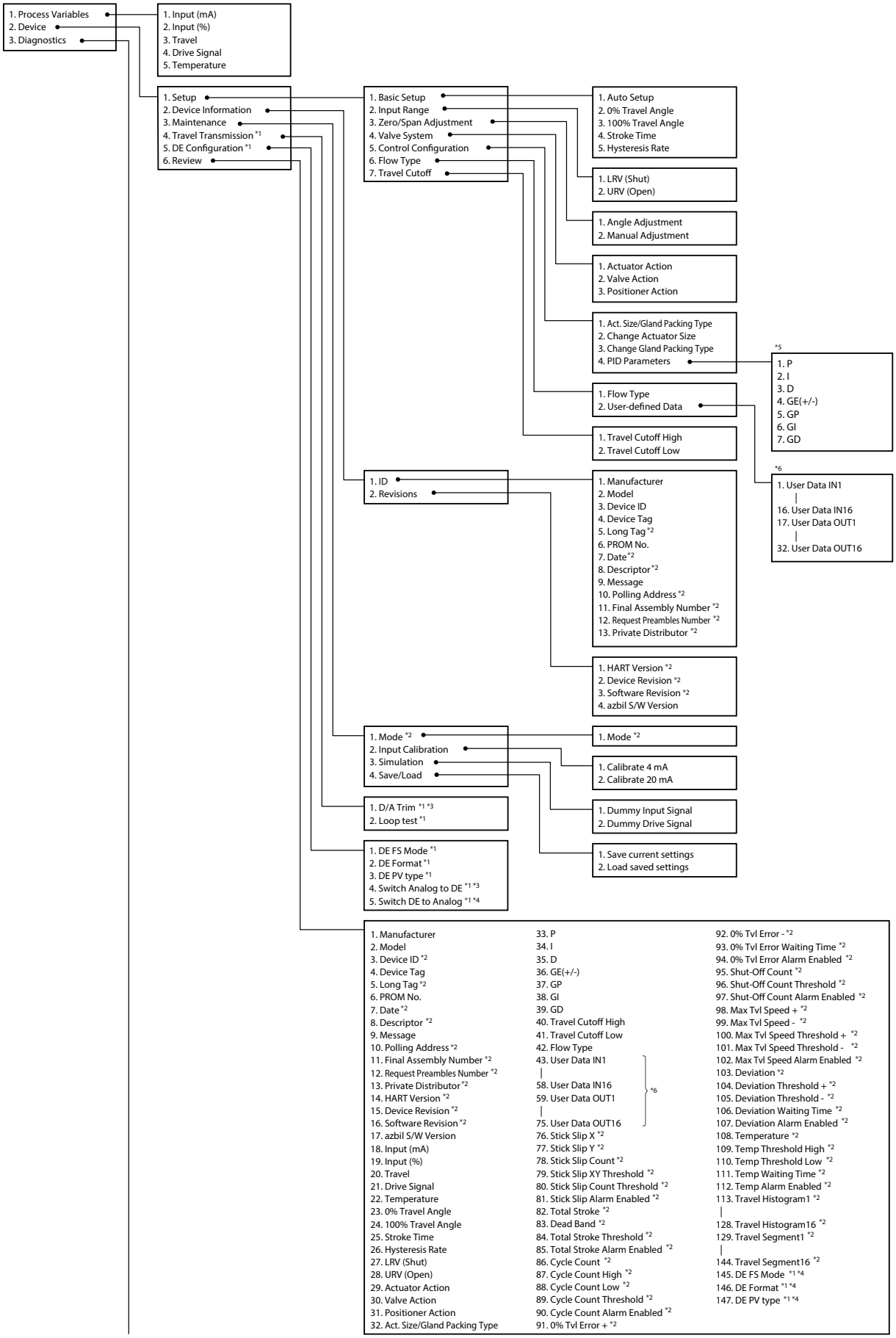
1. Process Variables
2. Device
3. Diagnostics
1. Input (mA)
2. Input (%)
3. Travel
4. Drive Signal
5. Temperature
1. Setup
2. Device Information
3. Maintenance
4. Travel Transmission *1
5. DE Configuration *1
6. Review
1. Basic Setup
2. Input Range
3. Zero/Span Adjustment
4. Valve System
5. Control Configuration
6. Flow Type
7. Travel Cutoff
1. Auto Setup
2. 0% Travel Angle
3. 100% Travel Angle
4. Stroke Time
5. Hysteresis Rate
1. LRV (Shut)
2. URV (Open)
1. Angle Adjustment
2. Manual Adjustment
1. Actuator Action
2. Valve Action
3. Positioner Action
1. Act. Size/Gland Packing Type
2. Change Actuator Size
3. Change Gland Packing Type
4. PID Parameters
*5
1. P
2. I
3. D
4. GE(+/-)
5. GP
6. GI
7. GD
1. Flow Type
2. User-defined Data
*6
1. User Data IN1
16. User Data IN16
17. User Data OUT1
32. User Data OUT16
1. Travel Cutoff High
2. Travel Cutoff Low
1. ID
2. Revisions
1. Manufacturer
2. Model
3. Device ID
4. Device Tag
5. Long Tag *2
6. PROM No.
7. Date *2
8. Descriptor *2
9. Message
10. Polling Address *2
11. Final Assembly Number *2
12. Request Preambles Number *2
13. Private Distributor *2
1. HART Version *2
2. Device Revision *2
3. Software Revision *2
4. azbil S/W Version
1. Mode *2
2. Input Calibration
3. Simulation
4. Save/Load
1. Mode *2
1. Calibrate 4 mA
2. Calibrate 20 mA
1. Dummy Input Signal
2. Dummy Drive Signal
1. Save current settings
2. Load saved settings
1. D/A Trim *1 *3
2. Loop test *1
1. DE FS Mode *1
2. DE Format *1
3. DE PV type *1
4. Switch Analog to DE *1 *3
5. Switch DE to Analog *1 *4
1. Manufacturer
2. Model
3. Device ID *2
4. Device Tag
5. Long Tag *2
6. PROM No.
7. Date *2
8. Descriptor *2
9. Message
10. Polling Address *2
11. Final Assembly Number *2
12. Request Preambles Number *2
13. Private Distributor *2
14. HART Version *2
15. Device Revision *2
16. Software Revision *2
17. azbil S/W Version
18. Input (mA)
19. Input (%)
20. Travel
21. Drive Signal
22. Temperature
23. 0% Travel Angle
24. 100% Travel Angle
25. Stroke Time
26. Hysteresis Rate
27. LRV (Shut)
28. URV (Open)
29. Actuator Action
30. Valve Action
31. Positioner Action
32. Act. Size/Gland Packing Type
33. P
34. I
35. D
36. GE(+/-)
37. GP
38. GI
39. GD
40. Travel Cutoff High
41. Travel Cutoff Low
42. Flow Type
43. User Data IN1
58. User Data IN16
59. User Data OUT1
75. User Data OUT16
*6
76. Stick Slip X *2
77. Stick Slip Y *2
78. Stick Slip Count *2
79. Stick Slip XY Threshold *2
80. Stick Slip Count Threshold *2
81. Stick Slip Alarm Enabled *2
82. Total Stroke *2
83. Dead Band *2
84. Total Stroke Threshold *2
85. Total Stroke Alarm Enabled *2
86. Cycle Count *2
87. Cycle Count High *2
88. Cycle Count Low *2
89. Cycle Count Threshold *2
90. Cycle Count Alarm Enabled *2
91. 0% Tvl Error + *2
92. 0% Tvl Error - *2
93. 0% Tvl Error Waiting Time *2
94. 0% Tvl Error Alarm Enabled *2
95. Shut-Off Count *2
96. Shut-Off Count Threshold *2
97. Shut-Off Count Alarm Enabled *2
98. Max Tvl Speed + *2
99. Max Tvl Speed - *2
100. Max Tvl Speed Threshold + *2
101. Max Tvl Speed Threshold - *2
102. Max Tvl Speed Alarm Enabled *2
103. Deviation *2
104. Deviation Threshold + *2
105. Deviation Threshold - *2
106. Deviation Waiting Time *2
107. Deviation Alarm Enabled *2
108. Temperature *2
109. Temp Threshold High *2
110. Temp Threshold Low *2
111. Temp Waiting Time *2
112. Temp Alarm Enabled *2
113. Travel Histogram1 *2
128. Travel Histogram16 *2
129. Travel Segment1 *2
144. Travel Segment16 *2
145. DE FS Mode *1 *4
146. DE Format *1 *4
147. DE PV type *1 *4

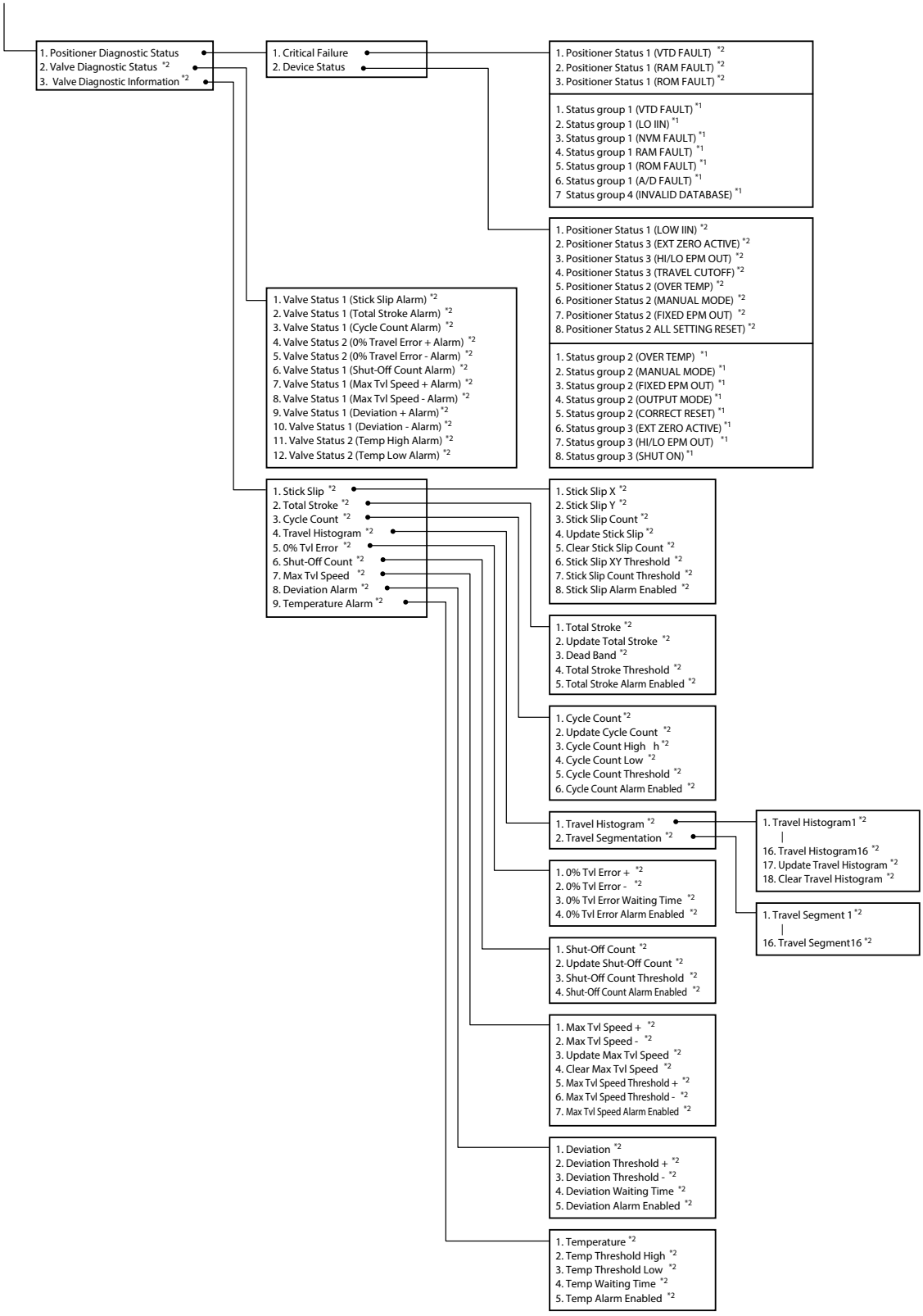

**1. Not displayed on the HART version.* **2. Not displayed on the SFN version.*

**3. Not displayed when DE communication selected.* **4. Enabled when DE communication selected (not shown).*

**5. Displayed when "Actuator Size" is "Param0."* **6. Displayed when "Flow Type" is "User-defined."*

Versions

This chapter describes the functions of the following versions.

[Model AVP300/301/200/201]

Azbil software version: 3.5 or later

[Model AVP302/202]

HART Version 6

Device revision: 1

Software revision: 1 or later

Azbil software version: 6.1 or later

4.3 Operation Data Confirmation

Allows confirmation of measured values and adjustment data for the operating state of the device.

The following items can be checked.

4.3.1 Measured value confirmation

Select [Process Variables]. You will be able to check the following items.

(1) Input (mA)
Displays the electric current input value.

(2) Input (%)
Displays the input signal (%).

(3) Travel
Displays the valve position (%).

(4) Drive Signal
Displays the EPM (electro-pneumatic module) drive signal (%).

(5) Temperature
Displays the positioner internal temperature (°C).

4.3.2 Adjustment data confirmation

Select [Device] >> [Setup] >> [Basic Setup]. You will be able to check the following items.

(1) 0 % Travel Angle
Displays the angle specified as the valve fully closed point.

(2) 100 % Travel Angle
Displays the angle specified as the valve fully open point.

(3) Stroke Time
Displays the valve full stroke time that was measured when auto-setup was executed.

(4) Hysteresis Rate
Displays the friction level of the gland packing that was measured when auto-setup was executed.

4.4 Device Configuration and Adjustment

In device configuration and adjustment, the configuration and adjustment that are necessary for this device to operate properly are performed. For the HART version, first set the mode of the device to "Out of service."
Select [Device] >> [Maintenance] >> [Mode] >> [Mode]. You will be able to change the mode.

Note

For the HART version, when finished performing adjustment and configuration, set the mode to "In service."

4.4.1 Auto-setup

Use auto-setup for the following items.

(1) Zero/span adjustment

(2) Actuator action direction configuration

(3) Input signal LRV and URV configuration

(4) Actuator size selection

(5) Hysteresis difference selection

(6) Travel transmission burnout (fail safe) direction selection

⚠Warning

- During auto-setup, the valve moves from fully open. Take appropriate measures beforehand to ensure that the movement of the valve will not cause injury or have an effect on the process.

Step	Procedure
1	Confirm that the input signal is 4 mA or higher.
2	Select [Device] >> [Setup] >> [Basic Setup] >> [Auto Setup] to execute the method.
3	Following the screen display, execute the operation. The control valve will start to move. This operation takes about two to three minutes.
4	When the operation ends, "Auto Setup is Completed" is displayed on the screen. When control via the input signal becomes possible, auto-setup ends.
5	Vary the input signal and check the movement to confirm that adjustment is being performed appropriately.

4.4.2 Zero/span adjustment

[Valve fully closed position configuration]

The procedure for setting the valve fully closed position is shown below.

Step	Procedure
1	Select [Device] >> [Setup] >> [Zero/Span Adjustment] >> [Angle Adjustment] >> [Zero].
2	Input the input signal that is to fully close the valve.
3	If the forced fully closed setting (travel cutoff low) is 0 % (default value + 0.5 %) or higher, the screen for configuring the travel cutoff low will appear. Set it to 0 % or lower.
4	From the [Zero Adjustment] menu, select a combination of the angle size and the increment or decrement for which to perform the adjustment. To increment by 0.03°, select [Increment/0.03].
5	Perform zero adjustment by carrying out step 4 above multiple times.
6	When adjustment is complete, select [Exit] on the [Zero Adjustment] menu.
7	The screen for the forced fully closed setting will appear. If you have already modified this value, return to the original value.
8	Select [Exit] from the [Zero/Span Adjustment] menu.

[Valve fully open position configuration]

The procedure for setting the valve fully closed position is shown below.

Step	Procedure
1	Select [Device] >> [Setup] >> [Zero/Span Adjustment] >> [Angle Adjustment] >> [Span].
2	Input the input signal that is to fully open the valve.
3	From the [Span Adjustment] menu, select a combination of the angle size and the increment or decrement for which to perform the adjustment. To decrement by 0.03°, select [Decrement/0.03].
4	Perform span adjustment by carrying out step 3 above multiple times.
5	When adjustment is complete, select [Exit] on the [Span Adjustment] menu.
6	The screen for setting the forced fully open value will appear. Set it if necessary. (Normally, this will not need to be set.)
7	Select [Exit] from the [Zero/Span Adjustment] menu.

4.4.3 Valve system

Configures the control valve control system.

Actuator action, valve action, and positioner action are set and modified here.

Actuator action

Select [Direct] or [Reverse]. If the feedback lever moves downward in response to increasing air pressure to the actuator, set this to [Direct]; if the feedback lever moves upward, set this to [Reverse]. (This will be set automatically if auto-setup is performed.)

The procedure for configuring actuator action is shown below.

Step	Procedure
1	Select [Device] >> [Setup] >> [Valve System] >> [Actuator Action].
2	Specify [Direct] or [Reverse] actuator action.
3	Send the modified setting to the device using the transmission button.

Valve action

Select [Direct] or [Reverse]. If the feedback lever moves downward when the control valve moves in the direction from open to closed, set this to [Direct]; if the feedback lever moves upward, set this to [Reverse].

The procedure for configuring valve action is shown below.

Step	Procedure
1	Select [Device] >> [Setup] >> [Valve System] >> [Valve Action].
2	Specify [Direct] or [Reverse] valve action.
3	Send the modified setting to the device using the transmission button.

Positioner action

Select [Direct] or [Reverse]. To make the device's output air pressure go to zero when the power supply is cut off, set this to [Direct]; to make the output air pressure go to the maximum level, set this to [Reverse].

Note

- Modifying the positioner action requires EPM (electro-pneumatic module) reconfiguration. Reconfiguration should be performed by an Azbil Corp. service representative.

The procedure for configuring positioner action is shown below.

Step	Procedure
1	Select [Device] >> [Setup] >> [Valve System] >> [Positioner Action].
2	Specify [Direct] or [Reverse] positioner action.
3	Send the modified setting to the device using the transmission button.

4.4.4 Control configuration

For the device's dynamic characteristics, the PID parameters are selected based on the combination of actuator size and gland packing type.

Actuator size

Select the actuator size from parameters 0 to 9, A, B, and C (Param 0 to 9, A, B, and C). (This is selected automatically when auto-setup is executed.)

If auto setup cannot be executed or the desired parameter cannot be set by auto setup, see the table below to select a PARAM that is suitable for the installed actuator.

Table 4-1. Actuator Size Parameter Table

Actuator Size (ACTUATOR SIZE)	Operating Speed [s]	Typical Actuator Type	Actuator Capacity (Typical Value) [cm³]
PARAM C	to 0.58	—	—
PARAM B	to 0.8	—	—
PARAM A	to 1.02	—	—
PARAM 1	to 1.5	PSA1, PSK1	600
PARAM 2	to 3	PSA2, HA2	1,400
PARAM 3	to 6.6	PSA3, HA3	2,700
PARAM 4	to 12	PSA4, HA4	6,600
PARAM 5	to 99	VA5	25,300
PARAM 6	to 20	VA6, PSA6	8,100
PARAM 7	to 1.9	RSA1	760
PARAM 8	to 4.3	RSA2	3,800
PARAM 9	to 99	VR3, VR3H	5,800
PARAM 0	—	—	Set individually*

** Consult with Azbil Corporation service personnel.*

Actuator size configuration procedure

Step	Procedure
1	Select [Device] >> [Setup] >> [Control Configuration] >> [Act. Size/Gland Packing Type], and check the current setting.
2	Select [Device] >> [Setup] >> [Control Configuration] >> [Change Actuator Size], and select from parameters 0 to 9, A, B, and C. If parameter 0 has been selected, the gap action type PID parameters can be set individually. (Parameters 7 to 9 are specifically for the Azbil Corporation VFR control valve RSA/VR actuator.)

Gland packing type

For the hysteresis difference due to friction of the control valve gland packing,

select from [Heavy], [Medium] and [Light]. (This is selected automatically when auto-setup is executed.) Regarding the types of gland packing, see Table 2 below.

Table 2. Gland Packing Type Parameter Table

Hysteresis* (HYSTERESIS)	Gland packing material example
Heavy (HEAVY)	Graphite packing
Medium (MEDIUM)	Yarn packing
Light (LIGHT)	V type PTFE packing

** This cannot be decided on the basis of material because it depends on the frictional force of the gland packing.*

Gland packing type configuration procedure

Step	Procedure
1	Select [Device] >> [Setup] >> [Control Configuration] >> [Act. Size/Gland Packing Type], and check the current setting. If the actuator size is 0, A, B, or C, the gland packing type is not displayed.
2	Select [Device] >> [Setup] >> [Control Configuration] >> [Change Gland Packing Type], and select [Light], [Medium], or [Heavy].

Gap PID parameters

For actuator size, if parameter 0 has been selected, the gap operation type PID parameters can be set individually. The gap action PID method is utilized as the dynamic characteristics algorithm for this device. In the gap action type PID method, deviation values (the gap) above and below the set-point value are set up, and the PID parameters are changed depending on whether the process value is inside or outside the gap. The merits of this method are that it is relatively simple to tune and that it enables both fast response and stability. The meaning of each parameter is described below.

Table 3. Gap Action Type PID Parameters

Parameter	Parameter Meaning	Units
P	Reciprocal of the in-gap proportional band	$\%^{-1}$
I	Inside-gap integrated time	s
D	Inside-gap differentiated time	s
GE	Gap width	%
GP	Reciprocal of the out-of-gap proportional band	$\%^{-1}$
GI	Outside-gap integrated time	s
GD	Outside-gap differentiated time	s

Example:

P = 2.000 indicates that $2\ \%^{-1} = \frac{1}{0.02}\ \% = 50\ \%$.

This means using 50 % as the proportional band, as it is commonly called.

Note

- The input setting range for these values is −19999 to +19999.
- The GP, GI, and GD parameters cannot be set when GE is 0.

Gap PID parameter configuration procedure

Step	Procedure
1	Select [Device] >> [Setup] >> [Control Configuration] >> [Change Actuator Size], and set the actuator size to the parameter 0. The PID parameters will be displayed.
2	Select [Device] >> [Setup] >> [Control Configuration] >> [PID Parameter]. You will be able to check or modify seven PID parameters (P, I, D, GE, GP, GI, and GD).
3	Enter values to set the seven respective PIDs. For the SFN version, start the method and enter the values in order.
4	For the HART version, send the modified setting to the device using the transmission button.

4.4.5 Input range

This procedure sets the electric current input value when the valve is fully closed (LRV) and the electric current input value when the valve is fully open (URV). Values can be entered in the 4 to 20 mA range. A split range can be specified as well.

Note

- Set these values so that the electric current input span (the difference between LRV and URV) is in the 4 to 16 mA range.
- If the span is 8 mA or less, the accuracy will be 1.5 % of full scale.

Input range configuration procedure

The procedure for setting the desired electric current input values is shown below.

Configuration procedure for electric current input values (mA) for valve fully closed

Step	Procedure
1	Select [Device] >> [Setup] >> [Input Range].
2	Select [LRV (Shut)], and enter the electric current input value when the valve is fully closed.
3	Send the modified setting to the device using the transmission button.

Configuration procedure for electric current input values (mA) for valve fully open (100 % position)

Step	Procedure
1	Select [Device] >> [Setup] >> [Input Range].
2	Select [URV (Open)], and enter the electric current input value when the valve is fully open (when the position is 100 %).
3	Send the modified setting to the device using the transmission button.

4.4.6 Flow Type

Flow Type

This function sets, from among four types of flow rate characteristics, the relationship between the input signal and the position. A sketch of the four characteristics (linear, equal percent, quick open, and user-defined) is shown below.

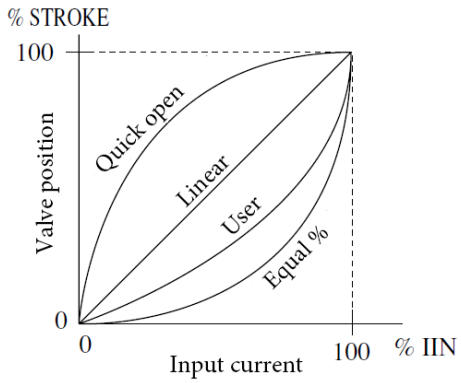

Figure 4-4. Flow Characteristics Overview

Note

If this has been set to user-defined, the flow rate characteristics conversion data can (must) be specified.

Flow Type configuration procedure

Step	Procedure
1	Select [Device] >> [Setup] >> [Flow Type].
2	Select from [Linear], [Equal Percent], [Quick Open], and [User-defined]. If [User-defined] has been selected, specify the flow rate characteristics conversion data [User-defined Data].
3	Send the modified setting to the device using the transmission button.

User-defined Data

This function sets user-defined flow rate characteristics conversion data. There are 16 data points for input and 16 for output. For each point, specify an input signal (User Data IN1–16) and an output signal (User Data OUT1–16). The characteristics will be the result of connecting the 16 points with straight lines.

Note

- Input all 16 points (input signal and position).
- Specify the input values in order from smallest to largest.
- Specify the values such that the characteristics increase monotonically.

User-defined data configuration procedure

Step	Procedure
1	For [Device] >> [Setup] >> [Flow Type], select [User-defined].
2	Select [User-defined], and enter all parameters User Data IN1–16 and User Data OUT1–16.
3	Send the modified setting to the device using the transmission button.

4.4.7 Travel Cutoff

Travel Cutoff

Sets the input signal values (%) that force the valve fully open and fully closed. The valve will be fully closed at input values less than the forced fully closed value, and will be fully open at input values greater than the forced fully open value. The input signal values (%) for the valve forced fully open and fully closed are set independently. An overview of the input/output characteristics when forced fully closed/open values have been set is shown below.

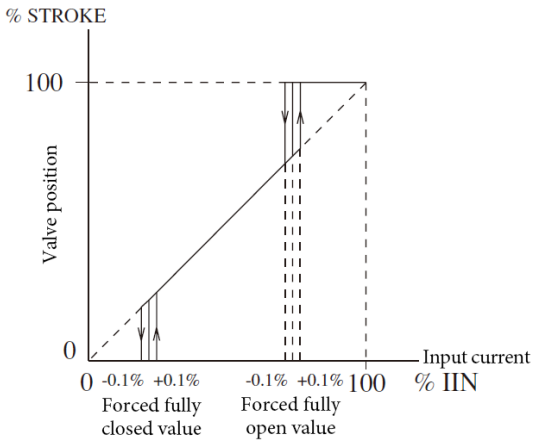

Figure 4-5. Forced Fully Open/Closed Settings

Note

- Set these parameters such that the forced fully open setting (Travel Cutoff High) is greater than the forced fully closed setting (Travel Cutoff Low).
- If a span adjustment is performed after auto-setup has been executed, the forced fully open setting will be 1 % less than the overstroke percentage.
- The forced fully open and forced fully closed settings have a hysteresis difference of 0.1 %
- As a result of configuring the forced fully closed setting, the control valve can become fully closed when the input signal drops to the preset value or lower, so set the output limiter (Lo) on the host to –1 % or higher.

Travel Cutoff Low configuration procedure

Step	Procedure
1	Select [Device] >> [Setup] >> [Travel Cutoff] >> [Travel Cutoff Low].
2	Specify the input signal value at which to force the valve fully closed.
3	Send the modified setting to the device using the transmission button.

Travel Cutoff High configuration procedure

Step	Procedure
1	Select [Device] >> [Setup] >> [Travel Cutoff] >> [Travel Cutoff High].
2	Specify the input signal value at which to force the valve fully open.
3	Send the modified setting to the device using the transmission button.

4.4.8 Travel Transmission (Model AVP301/201)

Select [Device] >> [Setup] >> [Travel Transmission] >> [Travel Transmission] to monitor the travel transmission signal output.

Select [Device] >> [Setup] >> [Travel Transmission] >> [Travel Transmission Failure Output] to check whether the burnout (fail-safe) direction for the travel transmission signal is set to High or Low.

The burnout direction is automatically determined based on the actuator action direction, valve action, and positioner action set during auto-setup.

4.5 Device Information Confirmation and Modification

Allows confirmation and modification of device information.

4.5.1 Device information/production number confirmation and modification

Select [Device] >> [Device Information] >> [ID]. You will be able to check or modify the following items.

(1) Manufacturer
Displays the manufacturer of the device. “Azbil Corporation” is displayed.

(2) Model
Displays the name and model number of the device. “SVP-V2” is displayed.

(3) Device ID (HART version only)
Displays device-specific information.

(4) Device Tag
Displays and allows modification of the tag number assigned to the device.

(5) Long Tag (HART version only)
Displays and allows modification of the long tag number assigned to the device.

(6) PROM No.
Displays ID information.

(7) Date (HART version only)
Displays and allows modification of specific dates such as the last configuration date for the device.

(8) Descriptor (HART version only)
Displays and allows modification of information required to manage the device.

(9) Message
Displays and allows modification of messages registered to the device.

(10) Polling Address (HART version only)
Displays and allows modification of the address of the device. When multiple devices are connected to the same loop, indicates device addresses (split range, multi-drop connection, and the like).

(11) Final Assembly Number (HART version only)
Displays and allows modification of specific management numbers such as the last configuration date for the device and system.

(12) Request Preambles Number (HART version only)
Displays the number of preambles that the device requests from the host.

(13) Private Distributor (HART version only)
Displays the name of the distributor of the device.

4.5.2 Device software revision information confirmation

Select [Device] >> [Device Information] >> [Revisions]. You will be able to check the following items.

(1) HART Version (HART version only)
Displays the revision number of the HART universal commands supported by model AVP302/202.

(2) Device Revision (HART version only)
Displays the revision number of the device-specific commands supported by model AVP302/202.

(3) Software Revision (HART version only)
Displays the revision number of the software in the same device revision.

(4) Azbil Software Version
Displays the software revision number. This is Azbil Corporation's internal management number, and has a one-to-one correspondence with the software revision above.

4.6 Maintenance

4.6.1 Mode

The HART® version has two modes. One is "In service" and the other is "Out of service." When performing calibration or adjustment, or when changing settings, the control valve will move, so first verify that these operations will not result in problems that could adversely affect plant operation. Then set the mode to "Out of service."

After completing calibration or adjustment, or after changing settings, set the mode to "In service." These operations cannot be performed when the device mode is "In service."

Mode modification procedure

Step	Procedure
1	Select [Device] >> [Maintenance] >> [Mode]
2	Select [Out of Service] or [In Service].
3	Send the modified setting to the device using the transmission button.

4.6.2 Input calibration

Calibrates the difference between the electric current input of 4 mA (or 20 mA) from the controller and the input signal of 4 mA (or 20 mA) perceived by the device.

4 mA electric current input calibration procedure

Step	Procedure
1	Select [Device] >> [Maintenance] >> [Input Calibration] >> [Calibrate 4 mA].
2	Set the electric current input (controller output) to 4 mA.
3	The electric current input value perceived by the device will be displayed on the screen. If that value is satisfactory for performing calibration, click [OK].
4	After a while, calibration will end, and then the input signal value will be displayed. Check whether it is correctly configured.

20 mA electric current input calibration procedure

Step	Procedure
1	Select [Device] >> [Maintenance] >> [Input Calibration] >> [Calibrate 20 mA].
2	Set the electric current input (controller output) to 20 mA.
3	The electric current input value perceived by the device will be displayed on the screen. If that value is satisfactory for performing calibration, click [OK].
4	After a while, calibration will end, and then the input signal value will be displayed. Check whether it is correctly configured.

4.6.3 Travel transmission signal output calibration (D/A trim)

The following is the procedure for calibrating the travel transmission signal output (4 mA and 20 mA).
Connect an ammeter to calibrate the current (mA) value.

Travel transmission signal output calibration procedure

Step	Procedure
1	Select [Maintenance] >> [Travel Transmission] >> [D/A Trim].
2	A confirmation message saying "Setting field device output to 4 mA" is displayed. If <OK> is clicked, the 4 mA travel signal perceived by the device will be output.
3	Enter the current value indicated by the ammeter and click <OK>.
4	If the ammeter indicates 4 mA, calibration of 4 mA output is complete. Select "Yes" and click <OK>. If a value other than 4 mA is indicated, recalibration of the 4 mA output is necessary. Select "No" and click <OK>, and repeat step 3 until the output is calibrated correctly.
5	A confirmation message saying "Setting field device output to 20mA" is displayed. If <OK> is clicked, the 20mA travel signal perceived by the device will be output.
6	Enter the current value indicated by the ammeter and click <OK>.
7	If the ammeter indicates 20 mA, calibration of the 20 mA output is complete. Select "Yes" and click <OK>. If a value other than 20mA is indicated, recalibration of the 20mA output is necessary. Select "No" and click <OK>, and repeat step 6 until the output is calibrated correctly.

4.6.4 Dummy input signal

Sets the input signal via communication, regardless of the value of the input signal from the controller. This function can be effective when, for instance, isolating problems during troubleshooting. For example, if the control valve does not move in response to input signals from the controller, but the valve operates correctly in response to the simulated current input, it follows that the problem is somewhere between the wiring and the host system.

Dummy input signal configuration procedure

Step	Procedure
1	Select [Device] >> [Maintenance] >> [Simulation] >> [Dummy Input Signal].
2	Select a dummy input signal ([0 %], [50 %], [100 %], or [Other]) from the [Dummy Input Signal] menu.
3	If you selected [Other], enter a value (0 to 100 %).
4	To cancel the dummy input signal, select [Clear] from the [Dummy Input Signal] menu.
5	To exit the [Dummy Input Signal] menu, select [Exit].

4.6.5 Dummy Drive Signal

Cuts off the drive signal from the PID control unit, and applies the dummy drive signal to the EPM (electro-pneumatic module).

Dummy Drive Signal configuration procedure

Step	Procedure
1	Select [Device] >> [Maintenance] >> [Simulation] >> [Dummy Drive Signal].
2	Select a dummy EPM drive signal ([0 %], [50 %], [100 %], or [Other]) from the [Dummy Drive Signal] menu.
3	If you selected [Other], enter a value (0 to 100 %).
4	To cancel the dummy EPM drive signal, select [Clear] from the [Dummy Drive Signal] menu.
5	To exit the [Dummy Drive Signal] menu, select [Exit].

4.6.6 Dummy travel transmission signal output (loop test)

The following is the procedure for configuring dummy travel transmission signal output.

Step	Procedure
1	Select [Maintenance] >> [Travel Transmission] >> [Loop Test].
2	From the Loop Test menu, select the percentage (0 %, 25 %, 50 %, 75 %, 100 %, Other) of dummy travel transmission signal to output.
3	If “Other” is selected, enter the desired value (−10 to 125 %).
4	To cancel dummy travel transmission signal output, select [Clear] from the Loop Test menu.
5	Select [Exit] to close the Loop Test menu.

4.6.7 Save Current Settings

Saves all of the device's internal data (settings) in place of the factory shipment data specifications (the data that was set based on the model number).

Use the "Load saved settings" operation to retrieve the saved data.

We recommend saving the configuration data after the device has been installed and all configuration has been completed.

Save current settings procedure

Step	Procedure
1	Select [Device] >> [Maintenance] >> [Save/Load] >> [Save current settings] to execute the command.
2	When the data is saved, "Save current settings was completed" is displayed.

4.6.8 Load saved settings

Returns all of the device's internal data settings to the settings at the time of shipping. This is useful when for instance installing the device on a different control valve.

- If this function is executed, the settings for valve fully open and valve fully closed (zero/span adjustment) will also be reset to the settings at the time of shipment. Overwrite these settings again the next time the device is used.
- If "Save Current Settings" in the configuration settings was executed before this function, the internal data saved at that time will be restored.

Load saved settings procedure

Step	Procedure
1	Select [Device] >> [Maintenance] >> [Save/Load] >> [Load saved settings] to execute the command.
2	When the data has been retrieved, "Load saved settings is completed" is displayed.

4.7 Valve Diagnostic Parameter Configuration

Performs configuration necessary for valve diagnostics.

4.7.1 Stick-Slip

A stick-slip value quantitatively represents abnormal valve movements caused by adhesion, seizing, and the like. Select [Diagnostics] >> [Valve Diagnostic Information] >> [Stick Slip]. You will be able to check or modify the following items. To change a value, select the item and then change it.

■ Stick-Slip X

Displays the Stick Slip X value.

■ Stick-Slip Y

Displays the Stick Slip Y value.

■ Stick-Slip Count

Displays the Stick Slip Count.

■ Update Stick Slip

Updates the Stick Slip X value, Stick Slip Y value, and Stick Slip Count to the most recent values.

- Select the [Update Stick Slip] menu to execute the update.

■ Clear Stick Slip Count

Resets the count to zero.

- Select the [Clear Stick Slip Count] menu to reset the count.

■ Stick Slip XY Threshold

Displays and allows modification of the XY threshold. This is the value which, when reached or exceeded by the stick-slip value (Stick Slip Y divided by Stick Slip X), results in incrementation of the count. (An alarm is not activated merely as a result of this value being exceeded, but an alarm is activated if the count threshold is exceeded.)

■ Stick Slip Count Threshold

Displays and allows modification of the count threshold value. An alarm occurs if the number of times the XY threshold is exceeded reaches or exceeds this value.

■ Stick Slip Alarm Enabled

Displays and allows modification of the alarm enabled/disabled status. If the status is Enabled, alarms will occur, and if the status is Disabled, alarms will not occur.

4.7.2 Total Stroke

This value is the result of totaling the distances (%, mm) that the valve moved.

Select [Diagnostics] >> [Valve Diagnostic Information] >> [Total Stroke]. You will be able to check or modify the following items. To change a value, select the item and then change it.

■ Total Stroke

Displays and allows modification of the total stroke value.

■ Update Total Stroke

Updates the total stroke distance to the latest value.

- Select the [Update Total Stroke] menu to execute the update.

■ Dead Band

Displays and allows modification of the dead band. The dead band is the minimum position width [± %FS] for calculating the total stroke distance.

■ Total Stroke Threshold

Displays and allows modification of the threshold. An alarm occurs if the stroke distance reaches or exceeds this value.

■ Total Stroke Alarm Enabled

Displays and allows modification of the alarm enabled/disabled status. If the status is Enabled, alarms will occur, and if the status is Disabled, alarms will not occur.

4.7.3 Cycle Count

Counts the total number of times that the valve position reverses after at least the specified amount of valve travel.

Select [Diagnostics] >> [Valve Diagnostic Information] >> [Cycle Count]. You will be able to check or modify the following items. To change a value, select the item and then change it.

■ Cycle Count

Displays and allows modification of the motion reversal count.

■ Update Cycle Count

Updates the reversal count to the latest value.

- Select the [Update Cycle Count] menu to execute the update.

■ Cycle Count High, Cycle Count Low

Displays and allows modification of the upper and lower threshold values for position width.

■ Cycle Count Threshold

Displays and allows modification of the threshold. An alarm occurs if the reversal count reaches or exceeds this value.

■ Cycle Count Alarm Enabled

Displays and allows modification of the alarm enabled/disabled status. If the status is Enabled, alarms will occur, and if the status is Disabled, alarms will not occur.

4.7.4 Travel Histogram

Indicates how frequently the valve travels in the specified position ranges, as a proportion of the total travel time.

[Travel Histogram]

Select [Diagnostics] >> [Valve Diagnostic Information] >> [Travel Histogram] >> [Travel Histogram]. You will be able to check the following items.

■ Travel Histogram 1 to Travel Histogram 16

Displays the frequency of the specified position region as a percentage.

■ Update Travel Histogram

Updates per-position frequency distribution values 1 to 16 to the latest values.

- Select the [Update Travel Histogram] menu to execute the update.

■ Clear Travel Histogram

Deletes the per-position frequency distribution values.

- Select the [Clear Travel Histogram] menu to delete the values.

[Travel Segmentation]

Select [Diagnostics] >> [Valve Diagnostic Information] >> [Travel Histogram] >> [Travel Segmentation]. You will be able to check or modify the following item.

■ Travel Segmentation 1 to Travel Segmentation 16

Displays and allows modification of the 15 position regions for the 16 positions.

4.7.5 0 % Travel Error

When the valve is fully closed, the zero point from when zero adjustment was performed is compared to the current zero point, and an alarm occurs if the discrepancy between them is greater than or equal to a specified deviation and if this discrepancy persists for longer than the specified time.

Select [Diagnostics] >> [Valve Diagnostic Information] >> [0 % Travel Error]. You will be able to check or modify the following items. To change a value, select the item and then change it.

■ 0 % Tvl Error +, 0 % Tvl Error –

Displays and allows modification of the deviation on the “+” side and “–” side.

■ 0 % Tvl Error Waiting Time

Displays and allows modification of the waiting time. An alarm occurs if the deviation continues for longer than this waiting time.

■ 0 % Tvl Error Alarm Enabled

Displays and allows modification of the alarm enabled/disabled status. If the status is Enabled, alarms will occur, and if the status is Disabled, alarms will not occur.

4.7.6 Shut-Off Count

Counts the total number of times that the valve is fully closed.

Select [Diagnostics] >> [Valve Diagnostic Information] >> [Shut-Off Count]. You will be able to check or modify the following items. To change a value, select the item and then change it.

■ Shut-Off Count

Displays and allows modification of the total fully closed count.

■ Update Shut-Off Count

Updates the fully closed count to the latest value.

- Select the [Update Shut-Off Count] menu to execute the update.

■ Shut-Off Count Threshold

Displays and allows modification of the threshold. An alarm occurs if the fully closed count reaches or exceeds this value.

■ Shut-Off Count Alarm Enabled

Displays and allows modification of the alarm enabled/disabled status. If the status is Enabled, alarms will occur, and if the status is Disabled, alarms will not occur.

4.7.7 Max Travel Speed

The maximum operating speed per unit time of the valve.

Select [Diagnostics] >> [Valve Diagnostic Information] >> [Max Travel Speed]. You will be able to check or modify the following items. To change a value, select the item and then change it.

■ Max Tvl Speed +, Max Tvl Speed –

Displays and allows modification of the maximum operating speed on the "+" side and "–" side.

■ Update Max Tvl Speed

Updates the maximum operating speed to the latest value.

- Select the [Update Max Tvl Speed] menu to execute the update.

■ Clear Max Tvl Speed

Deletes the maximum operating speed.

- Select the [Clear Max Tvl Speed] menu to clear the count.

■ Max Tvl Speed Threshold +, Max Tvl Speed Threshold –

Displays and allows modification of the thresholds on the "+" side and "–" side. An alarm occurs if the maximum operating speed is outside the range specified by the thresholds.

■ Max Tvl Speed Alarm Enabled

Displays and allows modification of the alarm enabled/disabled status. If the status is Enabled, alarms will occur, and if the status is Disabled, alarms will not occur.

4.7.8 Deviation Alarm

Select [Diagnostics] >> [Valve Diagnostic Information] >> [Deviation Alarm]. You will be able to check or modify the following items.

■ Deviation

Displays the position deviation value.

■ Deviation Threshold +, Deviation Threshold –

Displays and allows modification of the thresholds on the "+" side and "–" side. An alarm occurs if the position deviation exceeds this value.

■ Deviation Waiting Time

Displays and allows modification of the waiting time. An alarm occurs if the position deviation exceeds the threshold and this amount of time has elapsed.

■ Deviation Alarm Enabled

Displays and allows modification of the alarm enabled/disabled status. If the status is Enabled, alarms will occur, and if the status is Disabled, alarms will not occur.

4.7.9 Temperature Alarm

Select [Diagnostics] >> [Valve Diagnostic Information] >> [Temperature Alarm]. You will be able to check or modify the following items.

■ Temperature

Displays the temperature

■ Temp Threshold High, Temp Threshold Low

Displays and allows modification of the upper and lower thresholds. An alarm occurs if the temperature goes beyond one of these values and the waiting time has elapsed.

■ Temp Waiting Time

Displays and allows modification of the waiting time. An alarm occurs if the temperature goes beyond a threshold and this amount of time has elapsed.

■ Temp Alarm Enabled

Displays and allows modification of the alarm enabled/disabled status. If the status is Enabled, alarms will occur, and if the status is Disabled, alarms will not occur.

4.8 Self-diagnostics

This device provides a self-diagnostics function. This is useful for troubleshooting. For information regarding measures to take in response to each message, see Chapter 5, “Troubleshooting.”

4.8.1 Critical Failure

Select [Diagnostics] >> [Positioner Diagnostic Status]. You will be able to check the status conditions shown below. If the value of this item is ON, a failure was observed.

Explanation of self-diagnostics messages (major failures)

Message	Description / Cause
VTD FAULT	VTD (angle sensor) error. The feedback lever has become detached. The feedback lever has exceeded the allowable angular range. The VTD connector has become detached. (For the remote type, the cable is cut.)
RAM FAULT	RAM electrical part failure
ROM FAULT	ROM electrical part failure

4.8.2 Device Status

Select [Diagnostics] >> [Positioner Diagnostic Status] >> [Device Status]. You will be able to check the status conditions shown below. If the value of this item is ON, a failure was observed.

Explanation of self-diagnostics messages (minor failures)

Message	Description / Cause
LOW IIN	The input signal (current) is too low (3.80 mA or less)
EXT ZERO ACTIVE EXT SWITCH ACTIVE	External zero/span adjustment switch is being used.
HI/LO EPM OUT	The EPM drive signal exceeds the normal operating range.
EXT ZERO ACTIVE EXT SWITCH ACTIVE	External zero/span adjustment switch is being used.
TRAVEL CUTOFF	The valve is in the forced fully open/closed state.
OVER TEMP	The perceived internal temperature of the device is lower than −45 °C or higher than +85 °C.
MANUAL MODE SIMULATION MODE	A dummy input signal has been set.
FIXED EPM OUT SIMULATION MODE	A dummy EPM drive signal has been set.
ALL SETTINGS RESET	The adjustment data and setting data has been initialized.

4.8.3 Valve Diagnostic Status

Select [Diagnostics] >> [Valve Diagnostic Status]. You will be able to check the status conditions shown below. If the value of an item is ON, an alarm was triggered.

Status	Details
Stick Slip Alarm	The Stick Slip Alarm occurs when the valve exhibits stick and slip movement.
Total Stroke Alarm	The Total Stroke Alarm occurs when the total distance of the valve plug/stem stroke movement exceeds the threshold.
Cycle Count Alarm	The Cycle Count Alarm occurs when the number of control valve reverse operation cycles exceeds the threshold
0 % Tvl Error + Alarm	The 0 % Tvl Error + Alarm occurs when there is upward deviation between current 0 % travel angle and initial 0 % travel angle.
0 % Tvl Error – Alarm	The 0 % Tvl Error – Alarm occurs when there is downward deviation between current 0 % travel angle and initial 0 % travel angle.
Shut-Off Count Alarm	The Shut-Off Count Alarm occurs when the total number of valve closures exceeds the threshold.
Max Tvl Speed + Alarm	The Max Tvl Speed + Alarm occurs when the maximum stem movement speed in the upward direction in a day exceeds the threshold.
Max Tvl Speed – Alarm	The Max Tvl Speed – Alarm occurs when the maximum stem movement speed in the downward direction in a day exceeds the threshold.
Deviation + Alarm	The Deviation + Alarm occurs when there is a positive deviation between current travel (%) and input signal (%).
Deviation – Alarm	The Deviation – Alarm occurs when there is a negative deviation between current travel (%) and input signal (%).
Temp High Alarm	The Temp High Alarm occurs when the measured temperature exceeds the upper threshold.
Temp Low Alarm	The Temp Low Alarm occurs when the measured temperature falls below the lower threshold.

4.9 Precautions

A message like the one below may be displayed on a host device. If so, take the indicated countermeasure to address the problem.

[475 Communicator]

- If Actuator Size is set to “Param0” and GE (+/−) in “PID Parameters” is set to any value other than “0.0,” then even if GE (+/−) is changed to “0.0” and GP, GI, and GD are also changed, and these settings are then transmitted, the background color of the changed items will remain yellow.

  → Return to the level above this and display “PID Parameters” again.

Chapter 5: Maintenance and Troubleshooting

Overview of this chapter

This chapter describes the maintenance of this device and countermeasures to take when problems occur.

Cautions to ensure safe operation

⚠ Warning
Do not perform wiring work, turn on the electricity, etc., when your hands are wet. There is a risk of electric shock. Perform this work with the power supply turned off, and with dry or gloved hands.
When wiring in a hazardous area, work according to the methods prescribed by the guidelines for the hazardous area.
For flameproof explosion-proof specifications, do not under any circumstances open the cover during operation (when powered up).

⚠ Caution
After installing the device, do not place your body weight on it, use it as a scaffold, etc. There is a risk that it could fall over.
Do not touch the device unnecessarily while it is in operation. Depending on the environment in which the device is used, there is a danger that the surface of the device may be very hot or very cold.
When opening the cover of the terminal box, be careful of the edges of the cover, the threads of the screws on the main unit, etc. There is a possibility of injury.
Use a DC power supply that has overload protection. An overload can cause the emission of smoke and fire.
Bringing tools and the like into contact with the glass portion of the display can cause damage or injury. Exercise sufficient caution. In addition, be sure to wear safety glasses.
As this product is extremely heavy, watch your footing, and be sure to wear safety shoes.
When the device is in operation, do not touch moving parts such as the feedback lever. Your hand may become caught, resulting in injury.
Supply power correctly based on the specifications. An incorrect power input can damage the instrument.
When working in a high-temperature or low-temperature environment, wear gloves and other protective equipment.
Do not bring magnets or magnetic screwdrivers near the device. There is a possibility that the control valve will move in response.

5.1 Troubleshooting

Types of problems

Introduction

The following three types of problems can conceivably occur when starting up and beginning to operate the device.

- Problems due to a mismatch between device specifications and actual usage conditions
- Problems due to erroneous configuration or operation
- Problems due to device failure

Using the self-diagnostics function, problems with the device are recognized, divided into “major” and “minor,” and either displayed or addressed. When a problem occurs, refer to the troubleshooting guide presented here and take appropriate action.

Major failure

“Major failure” refers to a state in which a serious problem has arisen in the operation of the device and, if no action is taken, damage to the device itself may result. If a serious problem occurs with this device, the air pressure (travel) output system and the travel transmission system will output a value determined by the burnout (fail-safe) direction.

Example:
VTD FAULT # This is the message when the position sensor (VTD) fails.

Minor failure

In a “minor failure” state, there is no serious problem for the operation of the device. If a problem has occurred during operation of the device, and the self-diagnostics determine that the device has experienced a minor failure, the travel transmission output will continue to operate normally without changing to the fail-safe output.

Example:
MANUAL MODE # This is the message when the device is in the “dummy current” input state.

Troubleshooting

Introduction

Follow the procedures below to address any problems that occur during start-up or during operation. If these troubleshooting procedures do not fix the problem, there is a chance that the device is broken. Please use the contact information that appears on the back cover of this manual.

The device does not operate (no output air pressure)

1. Check whether configuration was carried out correctly. (For example, check the feedback lever allowable rotation angle.)
2. Check whether the appropriate supply air pressure is being supplied. (For example, check whether there are any air leaks.)
3. Check whether the appropriate input signal (power supply) is being input. (For example, check whether the electrical wiring is correct.)
4. If communication with the actuator is possible, try the positioner's self-diagnostics (section 4.8), and take measures based on the resulting messages.
5. Check whether there are any errors in the device's internal data settings.

Abnormal behavior of control valve (control valve not operating properly despite output air being supplied)

1. Change the A/M switch to the manual operating state, and then vary the regulator valve and check whether the valve stem moves smoothly. (Check whether there is galling or hardening of the valve packing.)
2. Check whether there are any errors in the device's internal data settings. (In particular, check actuator size, hysteresis, etc.)
3. If any of the symptoms in the following table appear, take the indicated measures.

Problem	Checkpoints and Measures
Hunting occurs. Overshoot occurs.	• Check whether the allowable rotation angle of the feedback lever is being exceeded. • Change the hysteresis setting from light to medium to heavy. If the problem persists, leave the hysteresis setting at heavy and change the actuator size setting to progressively smaller PRAM numbers. (For information regarding the procedure, see “Adjustment procedure when hunting occurs” below.)
Full stroke does not occur. Response speed is too slow.	• Check whether the valve fully closed position and fully open position (zero/span) adjustment is correct. • Check whether the EPM drive signals are within the 50 ±25 % range (See 4.3.1, “Measured value confirmation.”)
Overshoot occurs at startup	• When using a 3.85 mA min. signal, if the flow pressure fluctuates greatly when the valve is fully closed, overshoot may occur at the first startup. To suppress overshoot, temporarily lower the input signal to 0 mA.
Slow response at startup	• When starting from 0 mA, it may take some time until the travel changes. After power is turned on, use a 3.85 mA or greater signal. With this signal, response time will be normal.

Unable to communicate with the communicator

1. Is the electrical wiring correct?
2. Is the connection between the communicator and the main unit correct?
3. Is power being supplied to both the input and output sides?
4. Does the relationship between the power supply voltage and the external load satisfy the specifications?
5. Has wiring been carried out correctly for the respective models for which the travel transmission function is not included (models AVP300/302 and AVP200/202) and for which the travel transmission function is included (models AVP301 and AVP201)?
6. If the travel transmission function is included, is power being supplied to the travel transmission loop correctly, and has resistance in the loop been set up correctly?

Adjustment procedure when hunting occurs

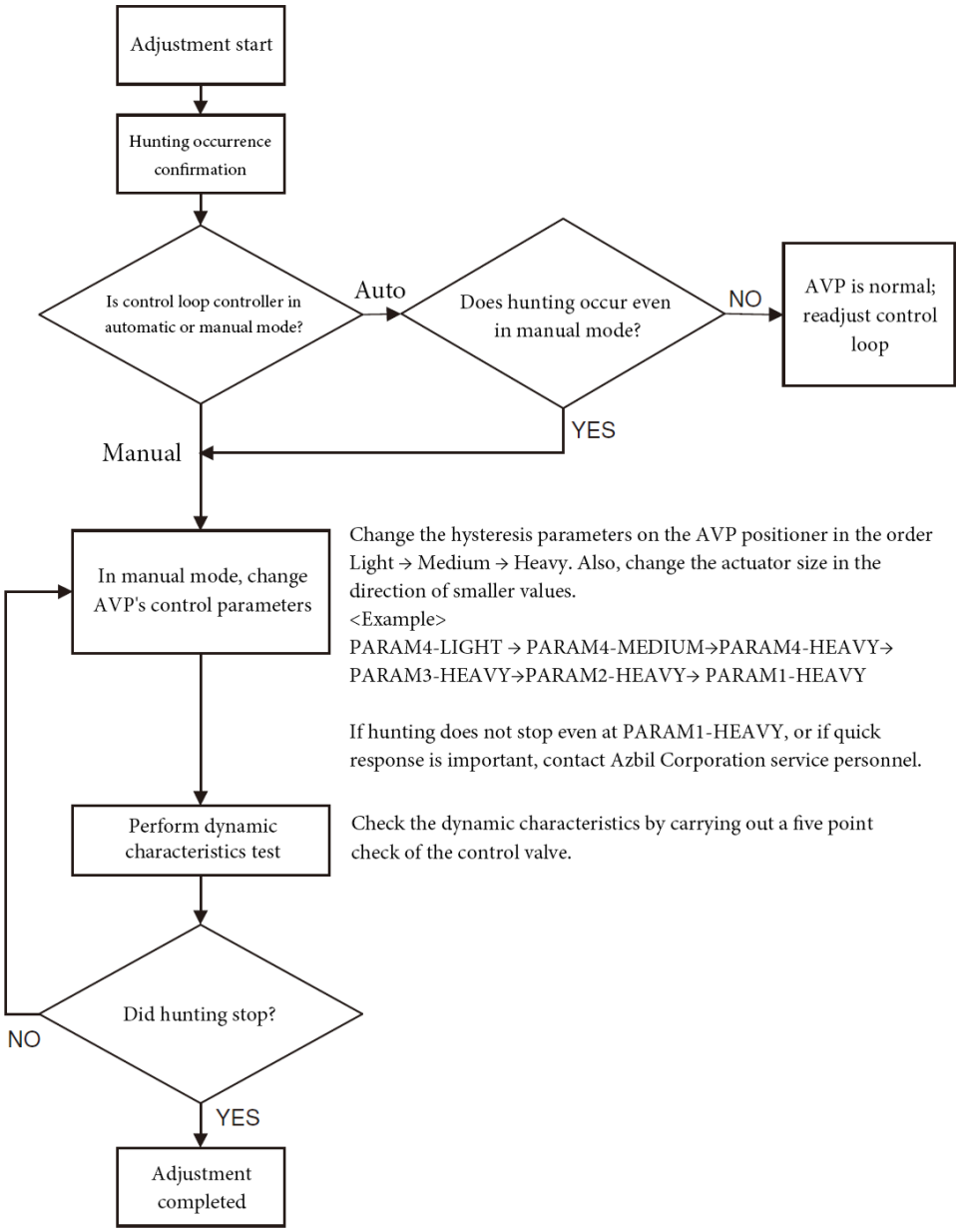

Explanation of self-diagnostics messages (major failure)

Message	Description/Cause	Measures
VTD FAULT	• VTD (angle sensor) error. • The feedback lever has become detached. • The feedback lever has exceeded the allowable angular range. • The VTD connector has become detached. (For the remote type, the cable is cut.)	Check whether the feedback lever has become detached or has exceeded the allowable angular range, whether the VTD connector has become detached, and whether a cable on a remote type is cut.
RAM FAULT	RAM electrical part failure	There is a problem with the electrical components. Contact the nearest Azbil Corporation branch office or sales office.
ROM FAULT	ROM electrical part failure	There is a problem with the electrical components. Contact the nearest Azbil Corporation branch office or sales office.

Explanation of self-diagnostics messages (minor failure)

Message	Description/Cause	Measures
LOW I_{IN}	The input signal (current) is too low (3.80 mA or less)	Provide an input current of at least 3.85 mA.
EXT ZERO ACTIVE EXT SWITCH ACTIVE	External zero/span adjustment switch is being used.	To end adjustment, return the external zero/span adjustment screw to the center position.
HI/LO EPM OUT	The EPM drive signal exceeds the normal operating range.	• Check whether forced fully open/closed feature is working. • Check supply air pressure. • Check whether the A/M switch is set to automatic. • If the output air pressure (P_{OUT1}) is close to the supply pressure, clean the nozzle. • If the output air pressure (P_{OUT1}) is close to zero, clean the fixed aperture.
TRAVEL CUTOFF	The valve is in the forced fully open/closed state.	Check the forced fully open/closed settings, and provide input signal values that are within the setting range. If the settings are correct, there is no error.
OVER TEMP	The perceived internal temperature of the device is lower than −45 °C or higher than +85 °C.	Ensure that the ambient temperature is in the usage conditions range of −40 to +80 °C. If this message is displayed even when the usage conditions are satisfied, there may be a problem with the temperature sensor. Contact the nearest Azbil Corporation branch office or sales office.
MANUAL MODE SIMULATION MODE	A dummy input signal has been set.	Turn off the dummy input signal.
FIXED EPM OUT SIMULATION MODE	A dummy EPM drive signal has been set.	Turn off the dummy EPM drive signal.
ALL SETTINGS RESET	The adjustment data and setting data has been initialized	Redo the adjustment and configuration work.

5.2 A/M Switch

Introduction

The A/M switch changes the control method for the output air from the positioner between automatic operation and manual operation.

Automatic operation

The output air pressure corresponding to the input signal is output from the device.

Manual operation

- The supply air pressure is output directly from the positioner.
- Manual operation can be performed using the pressure regulator. (Not available when a double-acting actuator is used.)

⚠Warning

- When the A/M switch is operated, the valve moves, which can be dangerous. Take appropriate measures beforehand to ensure that the movement of the valve will not cause injury or have an effect on the process.

A/M switch structure

The structure of the A/M switch is shown in the figure below.

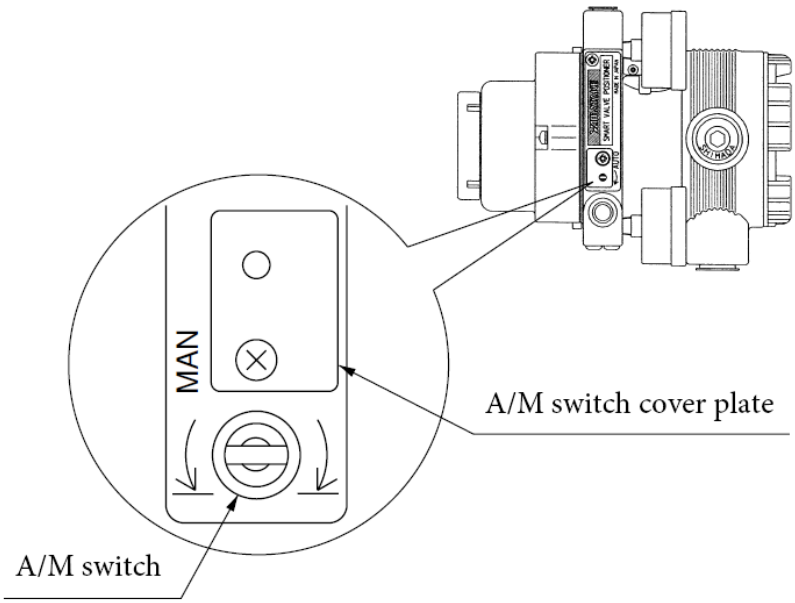

Figure 5-5. A/M Switch Structure

Procedure for switching from automatic to manual operation

The procedure for switching from automatic operation to manual operation is shown below.

Step	Procedure
1	Open the A/M switch cover plate by manually rotating it clockwise 180°. (The cover plate can be made to rotate easily by pressing on the upper left of the cover plate at the same time.)
2	Rotate the A/M switch one turn in the counterclockwise direction (the MAN direction) using a flat-blade screwdriver. (Confirm the change using an output air pressure gauge.)

Procedure for switching from manual to automatic operation

The procedure for switching from manual operation to automatic operation is shown below.

Step	Procedure
1	Rotate the A/M switch one turn in the clockwise direction (the AUTO direction) using a flat-blade screwdriver. (Confirm the change using an output air pressure gauge.)
2	Manually rotate the A/M switch cover plate counterclockwise 180° until it stops with a clicking sound.

⚠Caution

- Do not loosen the A/M switch cover plate screw.
- Do not rotate the A/M switch too far in the counterclockwise direction, as doing so will cause the O-ring to detach, resulting in air leakage.

5.3 Filter Replacement and Restriction Maintenance

Filter replacement and restriction maintenance methods

Introduction

Contamination from the instrumentation air that collect in the restriction unit of the device can be removed during maintenance. For the instrumentation air, use dry air which has been cleared of solid particles up to 3 μm in size (or less). Be sure to use a Phillips head screwdriver for the procedure below.

Replacement and maintenance procedure

Step	Procedure
1	Cut off the air supply to the device.
2	Remove the setscrews from the changes of the A/M switch unit. **Note** When removing the screws, be careful not to drop the washers, corrugated washers, etc., from the A/M switch cover plate.
3	Rotate the A/M switch in the MAN direction.
4	Use nippers or the like to cut the holder and remove the old filter. **Note** Dispose of the old holder and filter appropriately.
5	Use wire (diameter 0.3 mm) or the like to remove contaminants from the throttle. **Note** When removing the contaminants, be careful not to damage the restriction. Do not use an air gun. Also, make sure that there is no oil on the restriction.
6	Wrap the new filter around the A/M switch, and press it into place with the holder.
7	Screw down the A/M switch until it stops, and insert the O-ring into the groove.
8	Assemble the product nameplate of the A/M switch unit with the A/M switch cover plate using the setscrews.

5.4 Cleaning the Flapper

Introduction

If contaminants from the instrumentation air have accumulated on the flapper, clean the flapper as described below.

Step	Procedure
1	Remove the three pilot cover screws.
2	Have scraps of paper 0.2 mm thick ready. Common business cards would be suitable.
3	Use the scraps of paper to clean the contaminants that have accumulated in the gap between the EPM nozzle and the flapper.
4	After cleaning the gap, attach the pilot cover to the main unit.

⚠Caution

- If air pressure is being supplied to the device then, when the flapper is cleaned, the nozzle back pressure will change, causing the valve position to change suddenly. Clean the flapper only under conditions that that will neither cause personal injury nor affect plant operation even if the valve should move suddenly.

5.5 Insulation Resistance Test

⚠Caution

- As a rule, do not perform the insulation resistance test. Performing this test may damage the built-in lightning arrester for surge voltage absorption. If these tests absolutely must be carried out, follow the specified procedure closely.

Test procedure

- Detach the device's external wiring
- Connect the + and - input signal terminals, and the + and - output signal terminals.
- Perform the test in between these shorted terminals and the ground terminals.
- Applied voltage and decision criteria are as follows. In order to prevent damage to the meter, do not apply voltages higher than the values shown below.

Test criteria

The test criteria are as follows.

Test	Criteria
Insulation resistance test	2×10^7 Ω or higher at test voltage 25 V DC (25 °C, 60 %RH or lower)

5.6 Adjustment Procedure when using device with Booster Relay

When using the device with a booster relay, perform adjustment as follows.

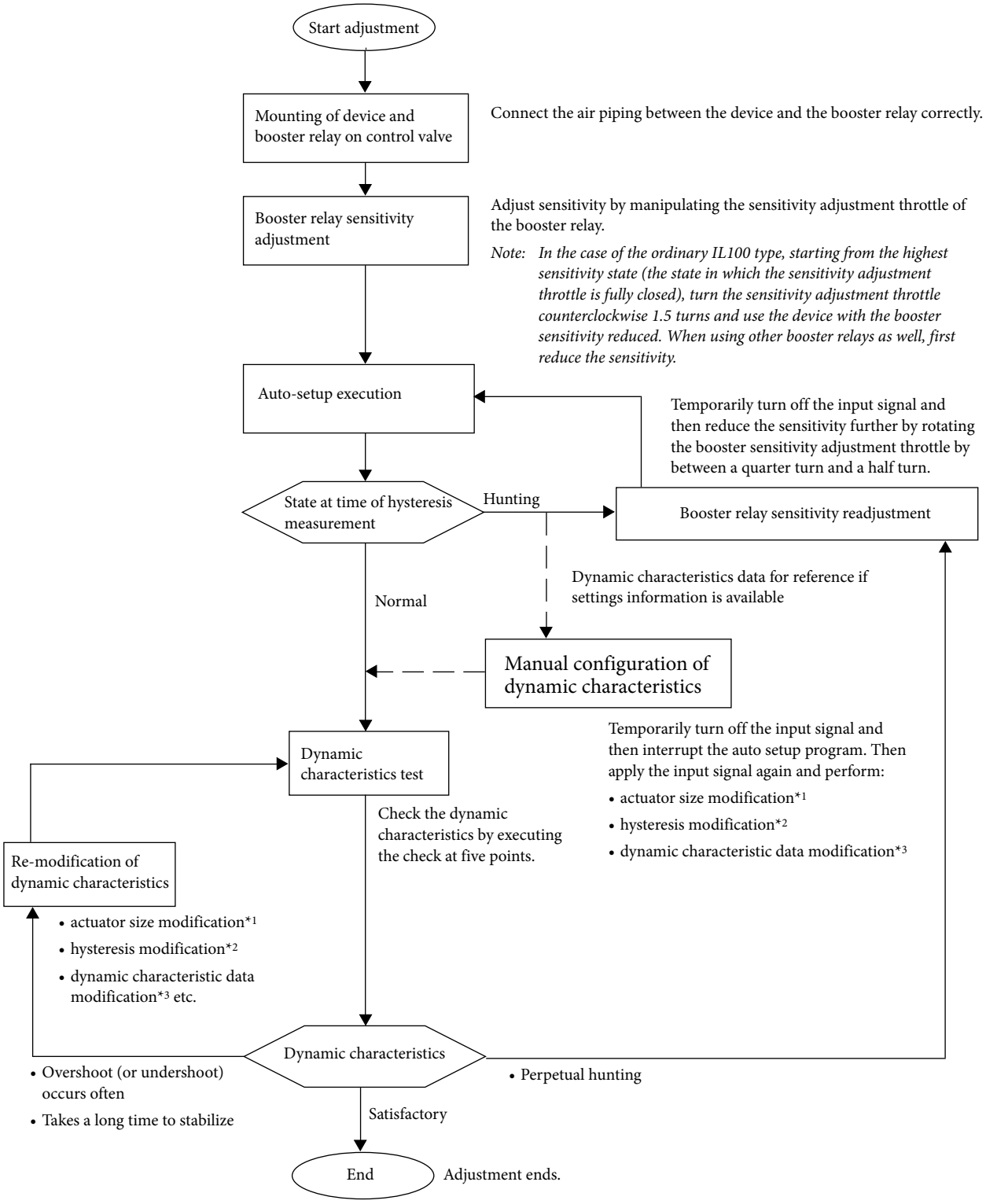

*1. Change the actuator size parameter such that it becomes progressively smaller: 6 to 5, 5 to 4, ...

*2. In order from light to medium to heavy

*3. Reduce P and GP, reduce I and GI, increase D and GD, etc.

5.7 List of Default Internal Data Values

Item		Contents
Tag number		XXXXXXXX
Output format		ANALOG XMTR
Burnout (fail-safe) direction		DOWN SCALE
Actuator operation		REVERSE
Positioner action		DIRECT
Valve action		DIRECT
Actuator size		PARAM 1
Hysteresis		HEAVY
PID parameter (parameter 0)	P	1.200
	I	4.000
	D	0.5000
	GE	+/−0.000 %
	GP	0.7000
	GI	4.000
	GD	0.5000
Flow characteristics		LINEAR
User-defined flow characteristics data		(Pressure balance type adjustment valve (ADVB/ ADVM) linear characteristics data)
Valve fully closed input (LRV)		4.000 mA
Valve fully open input (URV)		20.00 mA
Forced fully closed input		0.5000 % IIN
Forced fully open input		109.00 % IIN
Digital output signal	Output signal mode	Single Range
	Information volume mode	DE-4 Byte
	Failsafe mode	F/S= B/O Hi

5.8 Internal Block Diagram and I/O Flow

Internal Block Diagram

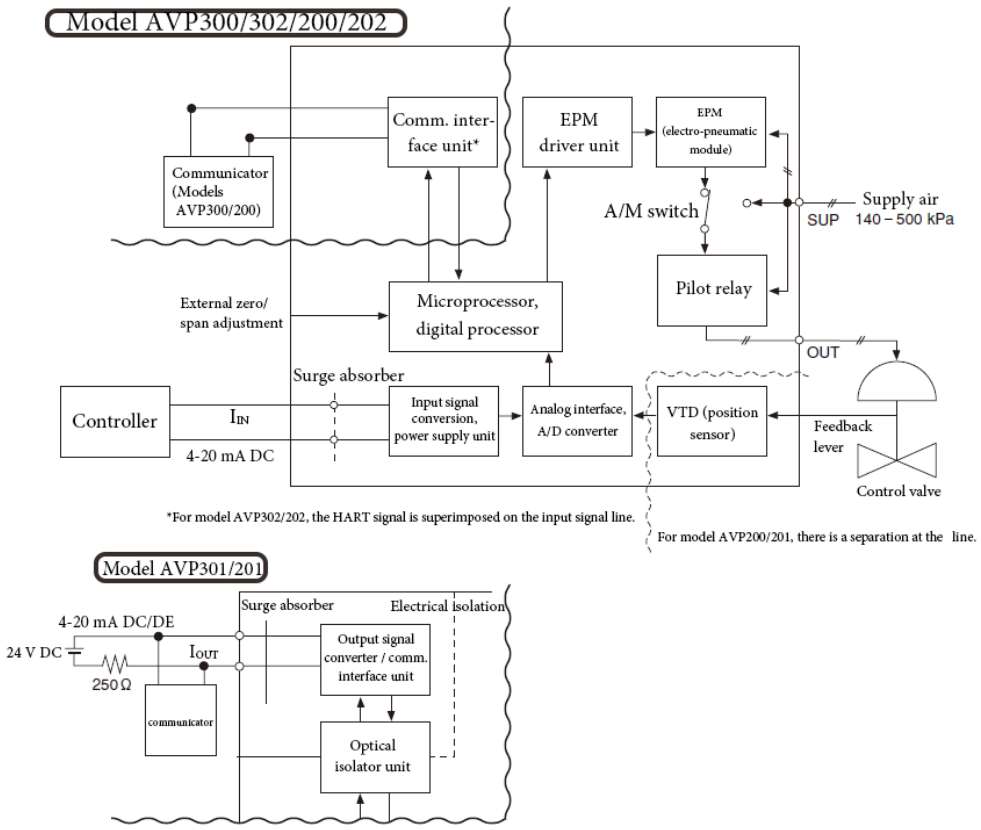

Figure 5-6. Internal Block Diagram

I/O Flow

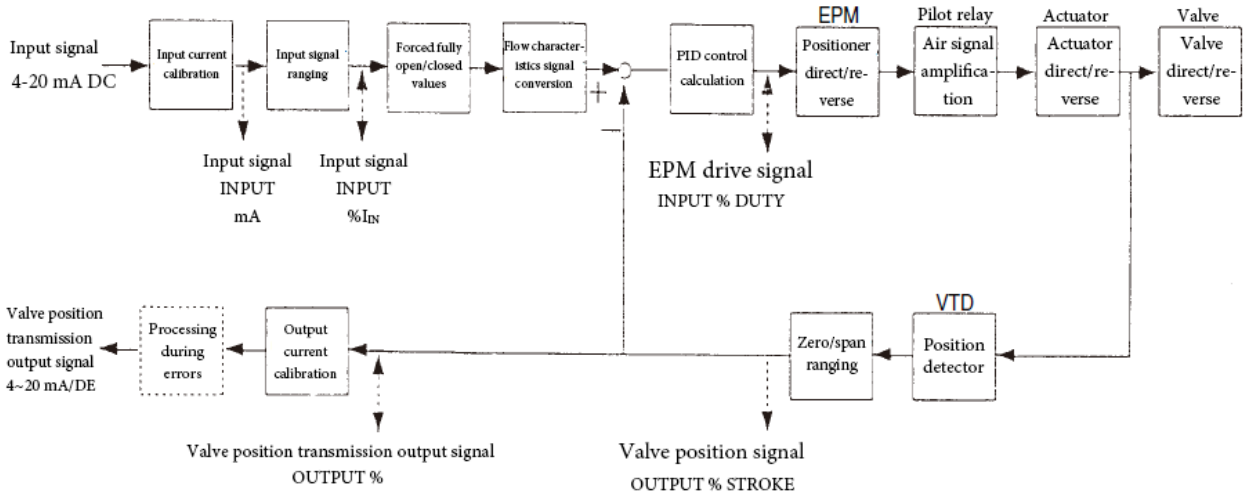

Figure 5-7. I/O Flow

5.9 Replacement Parts

No.	Name		Part Number		Quantity	Recommended Replacement Cycle*1 (Years)
1	Cover assembly (with locking screw and O-ring)		80377007-001 (standard finish) 80377007-002 (corrosion-resistant finish) 80377007-003 (silver finish) 80377007-021 (standard dark gray finish) 80377007-022 (corrosion-resistant dark gray finish)		1	5
2	O-ring (cover)		80020935-845		1	5
3	Phillips head screw with spring washer (terminal screw) set		80277581-001		5	—
49	Blind cap	TIIS Explosion-proof cap (G1/2)	C13270,TC16388,TC20800*5 C15278,C16389,TC17094*5	80377115-001	1	—
50		TIIS Explosion-proof cap (G1/2)	TC22692X,TC22723X*5	84515232-001	1	—
4		Explosion-proof cap (G1/2)	80377115-001		1	—
5		Cap (NPT1/2)	80277971-001		1	—
37		Cap (CM20)	80377205-001		1	—
6	Flameproof cable gland	For model AVP30_ input signal or travel transmission signal	C13270*5	80343903-003	1 (2)*2	—
		For model AVP30_/20_ input signal or travel transmission signal For model AVP20_ remote cable (positioner main unit side of terminal box connection)	TC16388*5 TC17094*5	80377921-003	1 (2)*2	—
			TC22692X*5 TC22723X*5	84506410-001	1 (2)*2	
		For model AVP30_ input signal or travel transmission	TC20800*5	80388728-002	1	—
		For model AVP20_ remote cable (positioner main unit side)	C16389*5	80377921-002	2	—
7	Flameproof universal elbow (G1/2)	For model AVP30_	C13270,TC16388*5	80357206-109	1	—
			TC20800,TC22692X*5	80357206-108	1	—
		For model AVP20_	C15278,C16389,TC17094*5	80357206-109	1	—
			TC22723X*5	80357206-108	1	—
8	Lever		80377148-001		1	—
9	Arm spring		80377149-001		1	—
10	Hex socket head cap bolt with spring washer (M5)		80377127-001		2 (4)*3	—
11	Pilot relay assembly		80377050-001		1	5
12	Packing (pilot relay)		80377072-001		1	5
13	Phillips head screw with spring washer		398-204-300		3	—
14	Pilot cover		80377064-001 (standard finish) 80377064-002 (corrosion-resistant finish) 80377064-003 (silver finish) 80377064-004 (corrosion-resistant silver finish)		1	—
15	Phillips head screw with spring washer (pilot cover)		398-204-250		3	—
16	Seal washer		80357789-001		3	—
17	Screw retainer ring		80235519-010		3	—
18	Cap		80377066-001 (standard finish) 80377066-002 (corrosion-resistant finish) 80377066-003 (silver finish) 80377066-004 (corrosion-resistant silver finish)		1	—
19	Phillips head screw with spring washer (cap)		398-203-080		2	—
20	Pilot base assembly		80377069-001		1	—
21	Packing (pilot base)		80377068-001		1	5
22	Phillips head screw with spring washer (pilot base)		398-204-200		4	—
23	A/M screw assembly (with filter, holder, and O-rings (3))		80377074-001		1	4
24	Phillips head screw with spring washer and flat washer		80277581-002		1	—
25	Phillips head screw with spring washer		398-204-080		1	—
26	Plate		80377089-001		1	—
27	Filter		80377077-001		1	4
28	Holder		80377078-001		1	—

No.	Name		Part Number	Quantity	Recommended Replacement Cycle*1 (Years)
29	Collar (A/M screw)		80377088-001	1	—
30	Wave washer (A/M screw)		80377073-001	1	—
31	O-ring (A/M screw)		80020935-216	1	5
32	O-ring (A/M screw)		80020935-313	2	5
33	Product nameplate		80377079-001	1	—
34	Extension lever		80377142-001	1	—
35	Magnet unit assembly (EPM)		80377010-001 (direct) 80377010-002 (reverse)	1	—
36	Hex socket head cap bolt with spring washer (for EPM)		80377046-001	2	—
38	Reversing relay main unit (standard finish, air supply connection Rc1/4)		80377323-001	1	5
39	Reversing relay main unit (corrosion-resistant finish, air supply connection Rc1/4)		80377323-011	1	5
40	Reversing relay main unit (standard silver finish, air supply connection Rc1/4)		80377323-021	1	5
51	Reversing relay main unit (corrosion-resistant silver finish, air supply connection Rc1/4)		80377323-031	1	5
41	Reversing relay main unit (standard finish, air supply connection 1/4NPT)		80377323-002	1	5
42	Reversing relay main unit (corrosion-resistant finish, air supply connection 1/4NPT)		80377323-012	1	5
43	Reversing relay main unit (standard silver finish, air supply connection Rc1/4)		80377323-022	1	5
52	Reversing relay main unit (corrosion-resistant silver finish, air supply connection 1/4NPT)		80377323-032	1	5
44	Magnetic switch for external zero/span adjustment		80377080-001	1	—
45	Insect-proofing wire mesh for reversing relay		80377143-001	2	—
46	VTD assembly (angle sensor)*4		80388590-001	1	—
47	O-ring (under terminal block)*4		80020935-845	1	5
48	Sensor assembly (Double bearing position detector of AVP200/201/202) with M4 round crimp terminals	Waterproof (Mounting screw M6) Cable length 3 m	80388709-01100	1	—
		TIIS Flameproof (Mounting screw M6) Cable length 3 m	80388709-02100	1	—
		Waterproof (Mounting screw 1/4-20UNC) Cable length 3 m	80388709-03100	1	—
		Waterproof (Mounting screw M6) Cable length 5 m	80388709-01200	1	—
		TIIS Flameproof (Mounting screw M6) Cable length 5 m	80388709-02200	1	—
		Waterproof (Mounting screw 1/4-20UNC) Cable length 5 m	80388709-03200	1	—
		Waterproof (Mounting screw M6) Cable length 10 m	80388709-01300	1	—
		TIIS Flameproof (Mounting screw M6) Cable length 10 m	80388709-02300	1	—
		Waterproof (Mounting screw 1/4-20UNC) Cable length 10 m	80388709-03300	1	—
		Waterproof (Mounting screw M6) Cable length 20 m	80388709-01400	1	—
		TIIS Flameproof (Mounting screw M6) Cable length 20 m	80388709-02400	1	—
		Waterproof (Mounting screw 1/4-20UNC) Cable length 20 m	80388709-03400	1	—

*1. The recommended replacement cycle assumes standard conditions (JIS C 1804 and C 1805). A shorter cycle may be necessary depending on environmental conditions (temperature, humidity, vibration, air quality, etc.) and operation profile (frequency of operation, ON/OFF operation, etc.).

*2. If travel transmission available

*3. If extension lever required

*4. Have an Azbil Corp. service representative perform replacement of the VTD assembly or O-ring (under the terminal block).

*5. Check the TIIS explosion-proof certification number on the name plate.

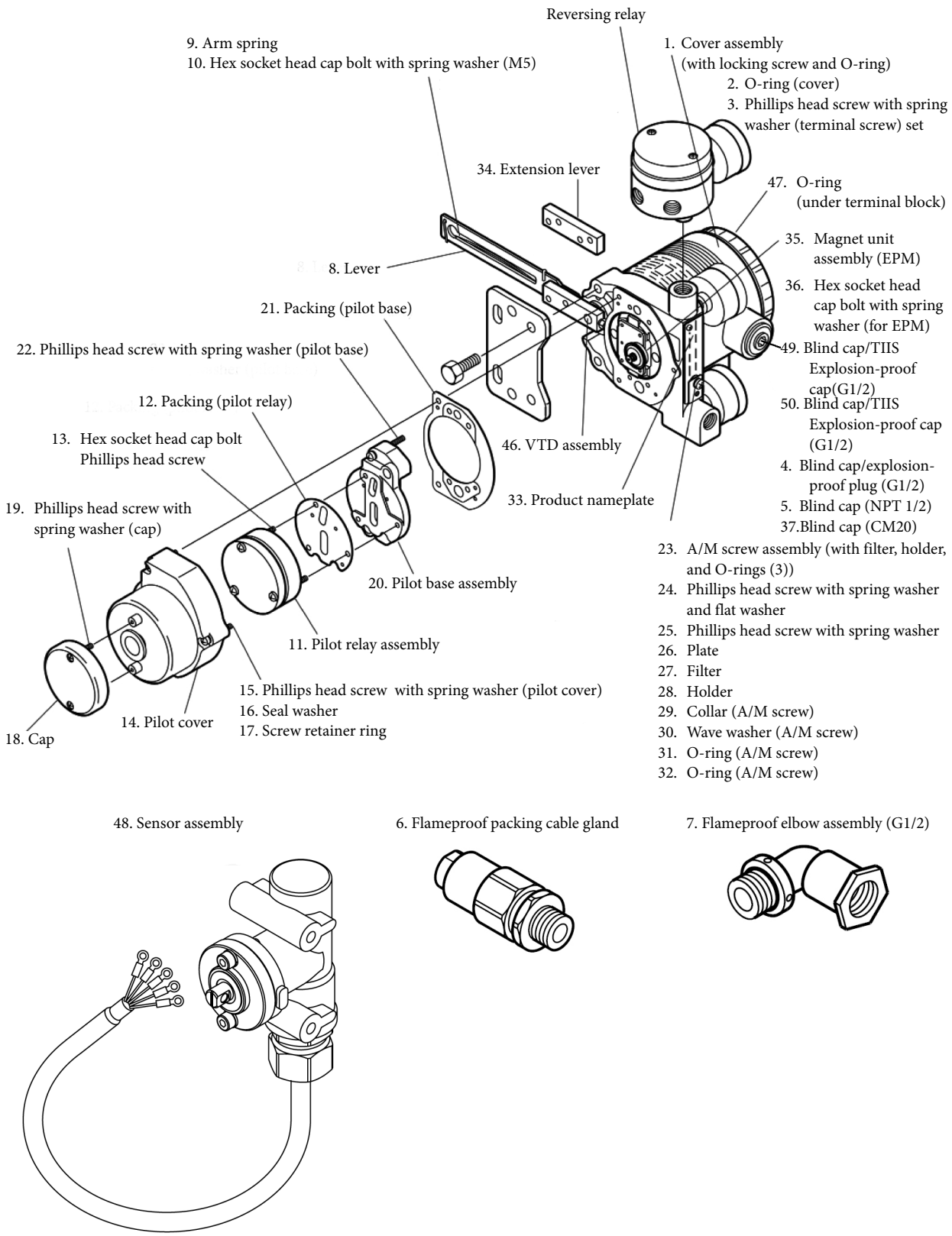

Figure 5-8. Replacement Parts

Chapter 6: Cautions Regarding Explosion-proof Models

Cautions to ensure safe operation

⚠ Warning
Do not perform wiring work, turn on the electricity, etc., when your hands are wet. There is a risk of electric shock. Perform this work with the power supply turned off, and with dry or gloved hands.
When wiring in a hazardous area, work according to the methods prescribed by the guidelines for the hazardous area.
For flameproof explosion-proof specifications, do not under any circumstances open the cover during operation (when powered up).

⚠ Caution
After installing the device, do not place your body weight on it, use it as a scaffold, etc. There is a risk that it could fall over.
Do not touch the device unnecessarily while it is in operation. Depending on the environment in which the device is used, there is a danger that the surface of the device may be very hot or very cold.
When opening the cover of the terminal box, be careful of the edges of the cover, the threads of the screws on the main unit, etc. There is a possibility of injury.
Use a DC power supply that has overload protection. An overload can cause the emission of smoke and fire.
Bringing tools and the like into contact with the glass portion of the display can cause damage or injury. Exercise sufficient caution. In addition, be sure to wear safety glasses.
As this product is extremely heavy, watch your footing, and be sure to wear safety shoes.
When the device is in operation, do not touch moving parts such as the feedback lever. Your hand may become caught, resulting in injury.
Supply power correctly based on the specifications. An incorrect power input can damage the instrument.
When working in a high-temperature or low-temperature environment, wear gloves and other protective equipment.
Do not bring magnets or magnetic screwdrivers near the device. There is a possibility that the control valve will move in response.

When using an explosion-proof model, be sure to use the product correctly, paying sufficient attention to the cautions in this chapter.

6.1 Cautions regarding explosion-proof models

Introduction

When using an explosion-proof model, be sure to use the product correctly, paying sufficient attention to the cautions in this chapter.

Check the certification number on the nameplate and refer to the corresponding cautions below.

Flameproof structure

"Flameproof structure" refers to a structure in which, if an explosion of the explosive gas occurs inside the enclosure in the fully closed state, the enclosure will withstand the resulting pressure, and in addition, there will be no danger of igniting external explosive gas.

Installation location selection criteria

[1. TIIS flameproof]

▪AVP300/301/302 (certification No. TC22692X), AVP200/201/202 (certification No. TC22723X)

Select an installation location for a TIIS flameproof model in accordance with the following criteria.

- Hazardous areas in which this device can be installed are defined as follows.

Ex d IIC T6 Gb

Equipment protection level categorized based on the possibility that the equipment can cause ignition

Ambient atmosphere withy gas ignition point of 85 °C or higher

Ambient atmosphere of explosive gas classified as IIC

Explosion-proof structure

Specifically, the hazardous areas in which the device can be installed are Type 1 areas and Type 2 areas. The device cannot be installed in Type 0 areas.

⚠ Warning

Do not loosen the fastening screws of the cover and angle sensor while the device is turned on and for one minute after it is turned off. Doing so can cause an explosion to occur.

⚠ Caution

Be sure to install the specified (the provided) flameproof cable gland on the signal wiring port of the device. Also, if the orientation of the wiring needs to be changed, use the provided flameproof elbow. In terms of flameproof configuration, in order to guarantee flameproof specifications, only specified flameproof cable glands and flameproof elbows may be used.

⚠ Caution	
⃠	When using the device, give sufficient consideration to preventing corrosion, deformation, damage, etc. with respect to the products case, cover, and the like. In addition, fasten the cover sufficiently tightly with the locking screw, and do not under any circumstances open the cover while the device is in use.
!	When performing wiring in an environment that conforms to low pressure wiring work in a Type 1 hazardous area, perform the work in accordance with the ""USER'S GUIDELINES for Installations for Explosive Atmospheres in General Industry" JNIOSH-TR-44 (2012)," published by the Technology Institution of Industrial Safety.

Ambient temperature range: −20 °C ≤ Ta ≤ +55 °C

model	Power	Output Current	Input current
AVP300/200	—		4-20 mA DC
AVP301/201	45 V DC	4-20 mA DC	4-20 mA DC
AVP302/202	—		4-20 mA DC

Operating conditions:

Retaining screws for the angle sensor and the fitting between terminal boxes should have a tensile strength grade of A2-70 or more.

Tighten the terminal box cover until at least 7.0 threads are engaged.

Make sure that the load resistance of the wires connected to the travel transmission loop of the AVP301/201 are 245 Ω or more.

Do not perform repairs, other than those described in this user's manual, that affect the explosion-proof structure.

Applicable Standard: "The Technical Recommendations of the National Institute of Occupational Safety and Health" JNIOSH-TR-46

▪AVP200/201/202 (certification No. TC17094)

Select an installation location for a TIIS flameproof model in accordance with the following criteria.

- Hazardous areas in which this device can be installed are defined as follows.

IIC T6

Ambient atmosphere with gas ignition point of 85 °C or higher

Ambient atmosphere of explosive gas classified as IIC

Specifically, the hazardous areas in which the device can be installed are Type 1 areas and Type 2 areas. The device cannot be installed in Type 0 areas.

Ambient temperature range: −20 to +55 °C

⚠Warning

- Do not loosen the fastening screws of the cover and angle sensor while the device is turned on and for one minute after it is turned off. Doing so can cause an explosion to occur.

⚠Caution

- Be sure to install the specified (the provided) flameproof cable gland on the signal wiring port of the device. Also, if the orientation of the wiring needs to be changed, use the provided flameproof elbow. In terms of flameproof configuration, in order to guarantee flameproof specifications, only specified flameproof cable glands and flameproof elbows may be used.
- When using the device, give sufficient consideration to preventing corrosion, deformation, damage, etc. with respect to the products case, cover, and the like. In addition, fasten the cover sufficiently tightly with the locking screw, and do not under any circumstances open the cover while the device is in use.
- When performing wiring in an environment that conforms to low pressure wiring work in a Type 1 hazardous area, perform the work in accordance with the "New Plant Electrical Equipment Explosion-Proofing Guide (Gas Explosion-Proofing, 1985)," published by the Technology Institution of Industrial Safety.

[2. FM Explosion-proof]

Select an installation location for an FM explosion-proof model AVP in accordance with the following criteria.

- Hazardous areas in which this device can be installed are defined as follows.

[Explosion-proof]

Class I, Division 1, Group A, B, C, and D

For gas

Ambient atmosphere of acetylene, ethylene, propane, etc.

Division 1 or 2 hazardous area according to NEC, article 500*

[Flameproof]

Class I, Zone 1, AEx d IIC T6

For gas

Ambient atmosphere with gas ignition point of 85 °C or higher

Explosive gas classified in IIC

Zone 1 or 2 hazardous area according to NEC, article 505*. Zone 0 is not possible.

[Dust-ignition]

Class II and III, Division 1, Group E, F, and G

Flammable dust
For flammable fibers

Ambient atmosphere of metal dust, coal or carbon black dust, or grain dust

Division 1 or 2 hazardous area according to NEC, article 500*

**NEC: NFPA70 - National Electric Code. For details, see the text of the NEC.*

Dustproof and waterproof performance specifications: TYPE 4X, IP66

Ambient temperature range: −40 to +80 °C (T6 < 80 °C)

⚠Warning

- Fasten the cover sufficiently tightly, and do not under any circumstances remove it with the power on if there is an explosive atmosphere surrounding the device. Doing so can cause an explosion to occur.

⚠Caution

- In accordance with NEC provisions, at the device's signal line exit ports be sure to perform electrical conduit piping work using FM-certified sealing fittings. When doing this work, make sure that the distance from the conduit entrance to the surface of the sealing compound is at most 457 mm (18 inches).
- When using the device, give sufficient consideration to preventing corrosion, deformation, damage, etc. with respect to the products case, cover, and the like.
- For details regarding piping work, see NEC articles 501, 502, and 503.

Installation of an Explosion-proof or Dust-ignition-proof Apparatus (reproduced from the NEC)

CAUTIONS

- Install the apparatus only in hazardous (classified) locations for which the apparatus has been approved.
- The sealing must be a maximum distance of 18 in. (457 mm) from the enclosure.
- Do not open the apparatus enclosure when an explosive atmosphere is present.

1. Class I, Division 1 locations

1.1 Wiring methods

- Threaded rigid metal conduit, threaded steel intermediate metal conduit, or Type MI cable with termination fittings approved for the location, can be employed
- Threaded joints must be made up of at least five threads fully engaged.

1.2 Sealing

- The sealing must be a maximum distance of 18 in. (457 mm) from the enclosure.
- The sealing of each conduit can be provided with a sealing fitting approved for Class I locations.
- The sealing compound must be approved and must not have a melting point of less than 93 °C (200 °F).
- The minimum thickness of the sealing compound must not be less than the trade size of the conduit, and must not under any circumstances be less than 5/8 in. (16 mm).
- Splices and taps must not be made in the fittings.

2. Class I, Division 2 locations

2.1 Wiring methods

- Threaded rigid metal conduit; threaded steel intermediate metal conduit; enclosed gasketed busways; Type PLTC cable in accordance with the provisions for remote-control, signaling, and power-limited circuits (see NEC, Article 725); Type ITC cable in cable trays, in raceways, supported by messenger wire, or directly buried where the cable is listed for this use; or Type MI, MC, MV, or TC cable with approved termination fittings can be employed.

2.2 Sealing

- Each conduit entering the apparatus enclosure is must be sealed as shown in 1.2.

3. Class II, Division 1 locations

3.1 Wiring methods

- Threaded rigid metal conduit, threaded steel intermediate metal conduit, or Type MI cable with termination fittings approved for the location, can be employed.

3.2 Sealing

- Where a raceway provides communication between the apparatus enclosure and an enclosure that is not required to be dust-ignition-proof, a sealing method must be provided to prevent the entrance of dust into the dust-ignition-proof enclosure through the raceway. One of the following methods can be used: (1) a permanent and effective seal; (2) a horizontal raceway not less than 10 ft (3.05 m) long; or (3) a vertical raceway not less than 5 ft (1.52 m) long and extending downward from the dust-ignition-proof enclosure.
- Seals are not required to be explosion-proof.

4. Class II, Division 2 locations

4.1 Wiring methods

- Rigid metal conduit; intermediate metal conduit; electrical metallic tubing; dust-tight wireways; Type MC or MI cable with approved termination fittings; Type PLTC in cable trays; Type ITC in cable trays; or Type MC or TC cable installed in ladder, ventilated trough, or ventilated channel cable trays in a single layer, with a space not less than the larger cable diameter between the two adjacent cables, can be employed.

4.2 Sealing

A sealing method must be provided as shown in 3.2.

5. Class III, Division 1 locations

5.1 Wiring methods

- Rigid metal conduit, rigid non-metallic conduit, intermediate metal conduit, electrical metallic tubing, dust-tight wireways, or Type MC or MI cable with approved termination fittings, can be employed.

5.2 Sealing

A sealing method is not required.

6. Class III, Division 2 locations

6.1 Wiring methods

Wiring methods must comply with 5.1.

6.2 Sealing

A sealing method is not required.

[3. FM intrinsically safe]

Select an installation location for an FM intrinsically safe model in accordance with the following criteria.

- Hazardous areas in which this device can be installed are defined as follows.

[Intrinsically safe]

Class I, II, III, Division 1, Group A, B, C, D, E, F, G, T4

Gas and flammable dust
For flammable fibers

Division 1 or 2 hazardous area according to NEC, article 500*

Ambient atmosphere of acetylene, ethylene, propane, etc.; ambient atmosphere of metal dust, coal or carbon black dust, grain dust

Gases with an ignition point of 135 °C or higher

[Intrinsically safe]

Class I, Zone 0, AEx ia IIC T4, Ta = 80 °C

For gas

Zone 0, 1 or 2 hazardous area according to NEC, article 505*

Class IIC explosive gases

Gases with an ignition point of 135 °C or higher

[Non-incendive]

Class I, Division 2, Group A, B, C, D, and T5, Ta = 80 °C

For gas

Division 2 hazardous area according to NEC, article 500*

Ambient atmosphere of acetylene, hydrogen, ethylene, propane, etc.

Gases with an ignition point of 100 °C or higher

[Suitable]

Class II, III, Division 2, Groups F,G, T4, Ta = 80 °C

Flammable dust
For flammable fibers

Division 2 hazardous area according to NEC, article 500*

Ambient atmosphere of carbon black dust or grain dust

Gases with an ignition point of 135 °C or higher

**NEC: NFPA70 - National Electric Code. For details, see the text of the NEC.*

Dustproof and waterproof performance specifications: TYPE 4X, IP66

Ambient temperature range: −40 to +80 °C

Perform electrical wiring work in accordance with NEC.

⚠Caution

- Use the FM intrinsic safety explosion-proof model device with a barrier that satisfies the specifications below.

  Input signal circuit:

  Model AVP300/301 $12.02 \leq V_{max} \leq 30$ V, $I_{max} = 100$ mA, Pi = 1 W, Ci = 18.26 nF, Li = 0.22 mH

  Model AVP302 $12.02 \leq V_{max} \leq 30$ V, $I_{max} = 100$ mA, Pi = 1 W, Ci = 41 nF, Li = 0.22 mH

  Travel transmission circuit:

  Model AVP301 $V_{max} \leq 30$ V, $I_{max} = 100$ mA, Pi = 1 W, Ci = 22 nF, Li = 0.22 mH

- Perform electrical wiring in accordance with the NEC.

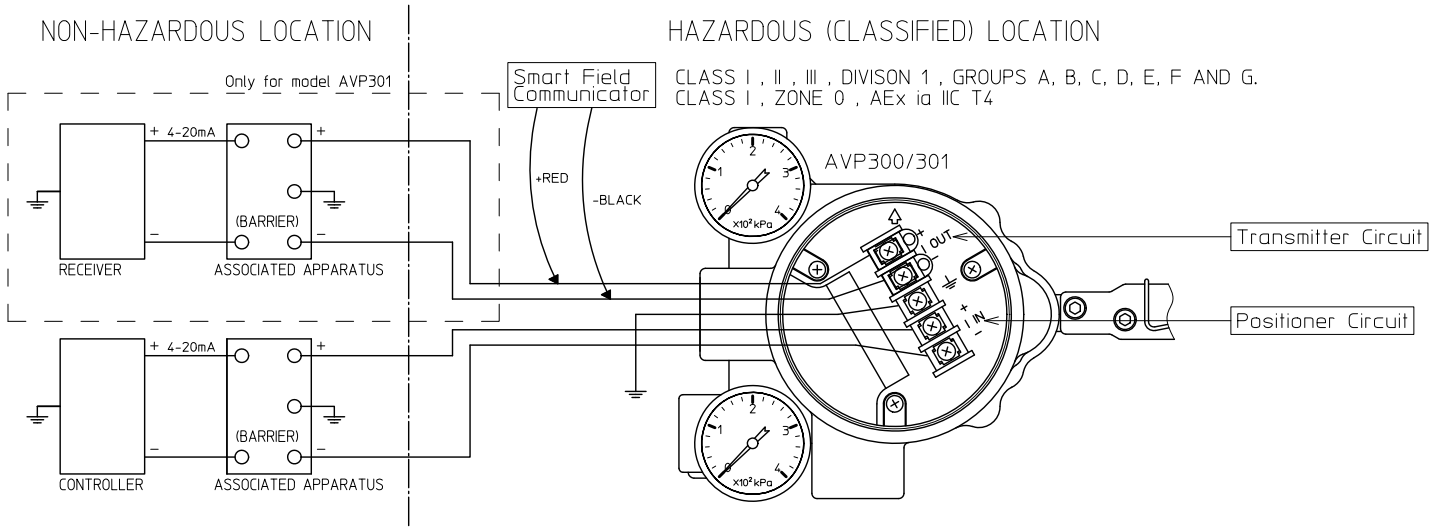

NOTES

1) MAXIMUM ENTITY PARAMETERS OF SVP3000Alphaplus AVP300/301.

Positioner circuit	12.02 ≦ Vmax ≦ 30V, Imax = 100mA, Pmax 1W, Ci = 18.26nF, Li = 0.22mH
Transmitter circuit for AVP300	Vmax = 30V, Imax = 100mA, Pmax 1W, Ci = 0, Li = 0.22mH
Transmitter circuit for AVP301	Vmax = 30V, Imax = 100mA, Pmax 1W, Ci = 22nF, Li = 0.22mH

2) THE FMRC APPROVED SMART FIELD COMMUNICATOR(SFC) MAY ONLY BE CONNECTED AT THE TERMINALS, IOUT+ AND IOUT- OF AVP300.
HOWEVER, EFFECT BY THE OUTPUT PARAMETERS OF SFC CAN BE IGNORED AS SFC IS SEPARATED FROM INTRNSICALLY SAFE LOOP BY THE 22 KΩ RESISTOR MOUNTED WITHN AVP300.

3) SFC MAY BE CONNECTED AT ANY POINT IN THE LOOP BETWEEN THE FMRC ENTITY APPROVED ASSOCIATED APPARATUS AND AVP301.
ENTITY PARAMETERS: Vmax = 42.4V, Imax = 225mA, Voc = 7.5V, Isc = 22.1mA, Po = 41.1mW, Ci = 0, Li = 0
BECAUSE THE SFC HAS THE MAXIMUM OUTPUT PARAMERTERS OF Voc = 7.5V, Isc = 22.1 mA AND Po = 41.4mW, IF THE SFC IS APPLIED IN THE INTRINSICALLY SAFE LOOP, THE MAXIMUM ALLOWABLE CONNECTED INDUCTANCE (La) AND CAPACITANCE (Ca) OF THE LOOP MUST BE CONSIDERED (SEE SHEET 2).
WHEN SELECTING AN APPROPRIATE BARRIER AS THE ASSOCIATED APPARATUS AND A SUITABLE WIRING CABLE TO CONNECT THE BARRIER TO AVP301.

4) INTERCONNECTION MAY ONLY OCCUR BETWEEN THE INTRINSICALLY SAFE APPARATUS AND FMRC ENTITY APPROVED ASSOCIATED ARRARATUS. INSTALLATION OF THE ASSOCIATED APPARATUS SHALL COMPLY WITH THE MANUFACTURER'S INSTRUCTION OF THE ASSOCIATED APPARATUS. THE FMRC APPOROVED ASSOCIATED APPARATUS INCLUDES ANY FMRC ENTITY APPROVED SINGLE OR DUAL BARRIER.

5) AVP300 OR AVP301 MAY BE MOUNTED WITHIN A CLASS I, DIVISON 2 HAZARDOUS (CLASSIFIED) LOCATION WITHOUT THE FMRC APPROVED ASSOCIATED APPARATUS IF THE POWER SUPPLY RATINGS DO NOT EXCEED THE MAXIMUM VOLTAGE, CURRENT AND POWER RATINGS OF AVP300 OR AVP301.
THE CLASS I, DIVISON 2 INSTALLATION AND WIRING PRACTICES SHOULD BE IN ACCORDANCE WITH THE NATIONAL ELECTRICAL CODE (ANSI/NFPA 70).

6) TO DETERMINE PROPER MATCHING OF I.S. EQUIPMENT AND THE MAXIMUM WIRING LENGTH USE THE FOLLOWING ENTITY PARAMETER MATCHING FORMULAS;
Voc OR Vt <= Vmax
Isc OR It <= Imax
Ca >= ΣCi + Cw (WIRING)
La >= ΣLi + Lw (WIRING)

7) DUST-TIGHT CONDUIT SEAL SHOULD BE USED WHEN INSTALLED IN CLASS II AND CLASS III ENVIRONMENTS.

名称 TITLE AVP300/301
EXTERNAL WIRING
FM I.S.

Azbil Corporation | 図番 DWG.NO. 80390981 | 改番 REV. 04 | シート SHT. 1/3 | A3

8) INTRINSIC SAFE INSTALLATION SHOULD BE IN ACCORDANCE WITH ANSI/ISA RP12.6 "INSTALLATION OF INTRINSICALLY SAFE SYSTEMS FOR HAZARDOUS (CLASSIFIED) LOCATIONS" AND THE NATIONAL ELECTRICAL CODE (ANSI/NFPA 70).

9) INSTALLATION OF ALL FMRC APPROVED DEVICES SHALL BE IN ACCORDANCE TO THE MANUFACTURER'S INSTALLATION DRAWINGS WHEN INSTALLING THE EQUIPMENT.

10) AEx ib IS SUITABLE ONLY FOR CLASS I, ZONE 1, HAZARDOUS (CLASSIFIED) LOCATIONS AND NOT SUITABLE FOR CLASS I, ZONE 0, AND CLASS I, DIVISION 1 HAZARDOUS (CLASSIFIED) LOCATIONS.

CONSIDERATION OF AN INTRINSICALLY SAFE LOOP
BASED ON ENTITY PARAMETERS

THE ENTITY CONCEPT ALLOWS INTERCONNECTION OF INTRINSICALLY SAFE APPARATUS TO ASSOCIATED APPARATUS NOT SPECIFICALLY EXAMINED IN SUCH COMBINATION.

BASICALLY, THE MAXIMUM UNPROTECTED CAPACITANCE (Ci) AND INDUCTANCE (Li) OF THE INTRINSICALLY SAFE APPARATUS, INCLUDING INTERCONNECTING WIRING PARAMETERS (Lw, Cw), MUST BE EQUAL OR LESS THAN THE CAPACITANCE (Ca) AND INDUCTANCE (La) WHICH CAN BE SAFELY CONNECTED TO THE ASSOCIATED APPARATUS. ALSO, THE MAXIMUM OUTPUT PARAMETERS (Voc, Isc, Po) OF THE ASSOCIATED APPARATUS MUST BE EQUAL OR LESS THAN THE MAXIMUM ENTITY PARAMETERS (Vmax, Imax, Pmax) OF THE INTRINSICALLY SAFE APPARATUS.

IF THE SFC IS CONNECTED TO THE INTRINSICALLY SAFE LOOP, FURTHER CONSIDERATION MUST BE TAKEN AS SHOWN BY THE FOLLOWING EXAMPLES.

EXAMPLE 1. La FOR POSITIONER LOOP
MAXIMUM OUTPUT CURRENT (Isum) TO THE LOOP IN THE WORST SITUATION IS THE DELIVERED CURRENT (Isc) BY THE BARRIER.
IF Isc OF THE BARRIER IS 93mA, Isum = 93mA.
THEN, BY APPLYING 100mA (THE NEXT HIGHER VALUE OF THE RESULTING Isum) TO THE RIGHT TABLE, La FOR GROUP A/B IS DETERMINED : La = 4.00mH.
THE ABOVE OBTAINED La VALUE MUST SATISFY THE BELOW RELATIONSHIP,
La >= Li (POSITIONER) + Lw (WIRING)
ACCORDINGLY, THE WIRING INDUCTANCE NEVER EXCEEDS THE VALUE La - Li (POSITIONER), i.e. IF Li OF POSITIONER CIRCUIT IS 0.22mH.
Lw <= 4.00mH - 0.22mH = 3.78mH.
NOTE: IF THE ABOVE Lw VALUE IS SMALLER THAN THE INDUCTANCE OF A CABLE, ANOTHER BARRIER WITH A SMALLER Isc VALUE SHOULD BE SELECTED.

EXAMPLE 2. Ca FOR POSITIONER LOOP
MAXIMUM OUTPUT VOLTAGE (Vsum) TO THE LOOP IN THE WORST SITUATION IS THE DELIVERED VOLTAGE (Vos) BY THE BARRIER.
IF Voc OF THE BARRIER IS 28V, Vsum = 28V.
THEN, BY APPLYING 28V TO THE RIGHT TABLE, Ca FOR GROUP A/B IS DETERMINED : Ca = 0.14uF.
THE ABOVE OBTAINED Ca VALUE MUST SATISFY THE BELOW RELATIONSHIP,
Ca >= Ci (POSITIONER) + Cw (WIRING)
ACCORDINGLY, THE WIRING CAPACITANCE NEVER EXCEEDS THE VALUE Ca - Ci (POSITIONER), i.e.
IF Ci OF POSITIONER CIRCUIT IS 0.0uF,
Cw <= 0.14uF - 0.0uF = 0.14uF.
NOTE: IF THE ABOVE Cw VALUE IS SMALLER THAN THE CAPACITANCE OF A CABLE, ANOTHER BARRIER WITH A SMALLER Vos VALUE SHOULD BE SELECTED.

Isum = Isc (ASSOCIATED APPARATUS) + Isc (SMART COMMUNICATOR)
Vsum = Voc (ASSOCIATED APPARATUS) + Voc (SMART COMMUNICATOR)

Isum	La (mH)		
(mA)	A/B	C	D
20	90.00	330.00	700.00
30	40.00	150.00	312.40
40	23.00	87.00	176.30
50	15.00	56.00	113.10
60	10.00	40.00	78.70
70	7.50	28.00	57.90
80	6.00	22.00	44.40
90	5.00	18.00	35.10
100	4.00	15.00	28.50
110	3.00	12.00	23.60
120	2.50	10.00	19.80
130	2.00	9.00	16.90
140	1.60	8.00	14.60
150	1.30	7.00	12.70
160	1.00	6.20	11.20
170	0.80	5.50	9.90
180	0.60	5.00	8.80
200	0.50	4.00	7.20
220	0.40	3.20	5.90

Vsum	Ca (uF)		
(V)	A/B	C	D
5	91.97	275.91	735.77
10	3.21	9.64	25.69
15	0.78	2.35	6.26
20	0.34	1.01	2.70
22	0.26	0.78	2.09
24	0.21	0.63	1.67
26	0.17	0.51	1.37
28	0.14	0.43	1.14
30	0.12	0.36	0.97
32	0.11	0.32	0.84
34	0.09	0.28	0.73
36	0.08	0.24	0.65
38	0.08	0.22	0.58
40	0.06	0.19	0.52
42	0.06	0.18	0.47

名称 TITLE AVP300/301
EXTERNAL WIRING
FM I.S.

Azbil Corporation | 図番 DWG.NO. 80390981 | 改番 REV. 03 | シート SHT. 2/ | A3

図番 DWG.NO. 80390981 2/

EXAMPLE 3. La FOR TRANSMITTER LOOP
MAXIMUM OUTPUT CURRENT (Isum) TO THE LOOP IN THE WORST SITUATION IS THE DELIVERED CURRENT (Isc) BY THE BARRIER AND THAT(Isc) BY THE SFC.
IF Isc OF THE BARRIER IS 93mA, Isum = 93mA + 22.1mA = 115.1mA.
THEN, BY APPLYING 120mA (THE NEXT HIGHER VALUE OF THE RESULTING Isum) TO THE TABLE (sheet2), La FOR GROUP A/B IS DETERMINED : La = 2.50mH.
THE ABOVE OBTAINED La VALUE MUST SATISFY THE BELOW RELATIONSHIP,
La >= Li (TRANSMITTER CIRCUIT) + Lw (WIRING) + Li (SFC).
ACCORDINGLY, THE WIRING INDUCTANCE NEVER EXCEEDS THE VALUE La - Li (TRANSMITTER) - Li (SFC),
i.e. IF Li OF TRANSMITTER CIRCUIT IS 0.22mH,
Lw <= 2.50mH - 0.22mH = 2.28mH.
NOTE : IF THE ABOVE Lw VALUE IS SMALLER THAN THE INDUCTANCE OF A CABLE, ANOTHER BARRIER WITH A SMALLER Isc VALUE SHOULD BE SELECTED.

EXAMPLE 4. Ca FOR TRANSMITTER LOOP
MAXIMUM OUTPUT VOLTAGE (Vsum) TO THE LOOP IN THE WORST SITUATION IS THE SUM OF THE DELIVERD VOLTAGE (Voc) BY THE BARRIER AND THAT (Voc) BY THE SFC.
IF Voc OF THE BARRIER IS 28V, Vsum = 28V + 7.5V = 35.5V.
THEN, BY APPLYING 36V (Ca = 0.08uF FOR GAS GROUPS A AND B).
THE ABOVE OBTAINED Ca VALUE MUST SATISFY THE BELOW RELATIONSHIP,
Ca >= Ci (TRANSMITTER CIRCUIT) + Cw (WIRING) + C (SFC)
ACCORDINGLY, THE WIRING CAPACITANCE NEVER EXCEEDS THE VALUE ,
Ca - Ci (TRANSMITTER CIRCUIT) - Ci (SFC), i.e. IF Ci OF TRANSMITTER CIRCUIT IS 0.07uF,
Cw (FOR AVP301) <= 0.08uF - 0.07uF = 0.01uF.
NOTE : IF THE ABOVE Cw VALUE IS SMALLER THAN THE CAPACITANCE OF A CABLE, ANOTHER BARRIER WITH A SMALLER Voc VALUE SHOULD BE SELECTED.

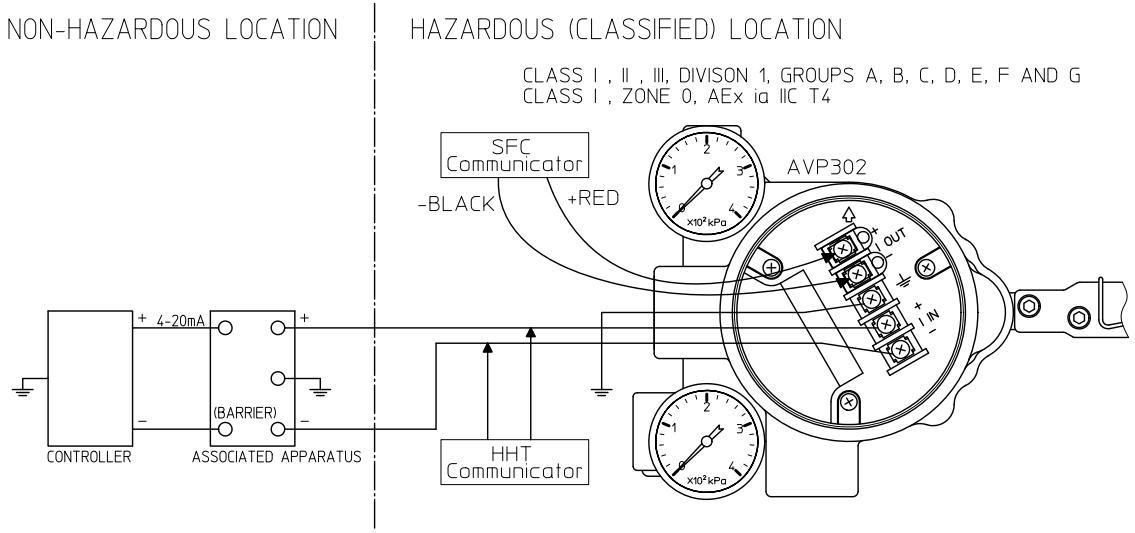

NOTES

1) MAXIMUM ENTITY PARAMETERS OF SVP3000Alphaplus AVP302,
Positioner circuit 12.02 ≦ Vmax ≦ 30V, Imax = 100mA, Pmax 1W, Ci = 41nF, Li = 0.22mH
Transmitter circuit for AVP302 Vmax = 30V, Imax = 100mA, Pmax 1W, Ci = 0, Li = 0.22mH

2) THE FMRC APPROVED HART COMMUNICATOR (HHT) MAY BE CONNECTED AT ANY POINT IN THE LOOP BETWEEN THE FMRC ENTITY APPROVED ASSOCIATED APPARATUS AND AVP302. SEE CONTROL DRAWING OF THE HHT FOR ENTITY PARAMETERS. BECAUSE THE HHT HAS OUTPUT PARAMETERS OF Voc AND Isc, IF THE HHT IS APPLIED IN THE INTRINSICALLY SAFE LOOP, THE MAXIMUM ALLOWABLE CONNECTED INDUCTANCE (La) AND CAPACITANCE (Ca) OF THE LOOP MUST BE CONSIDERED (SEE SHEET2). WHEN SELECTING AN APPROPRIATE BARRIER AS THE ASSOCIATED APPARATUS AND A SUITABLE WIRING CABLE TO CONNECT THE BARRIER TO AVP302, REFER TO EXAMPLE 1 AND 2 IN SHEET2.

3) THE FMRC APPROVED SMART FIELD COMMUNICATOR (SFC) MAY ONLY BE CONNECTED AT THE TERMINALS, IOUT+ AND IOUT- OF AVP302.
ENTITY PARAMETERS: Vmax = 42.4V, Imax = 225mA, Voc = 7.5V, Isc = 22.1 mA, Po = 41.1mW, Ci = 0, Li = 0
HOWEVER, EFFECT BY THE OUTPUT PARAMETERS OF SFC CAN BE IGNORED AS SFC IS SEPARATED FROM INTRINSICALLY SAFE LOOP BY THE 22kΩ RESISTOR MOUNTED WITHIN AVP302.

4) INTERCONNECTION MAY ONLY OCCUR BETWEEN THE INTRINSICALLY SAFE APPARATUS AND FMRC ENTITY APPROVED ASSOCIATED ARRARATUS. INSTALLATION OF THE ASSOCIATED APPARATUS SHALL COMPLY WITH THE MANUFACTURER'S INSTRUCTION OF THE ASSOCIATED APPARATUS. THE FMRC APPOROVED ASSOCIATED APPARATUS INCLUDES ANY FMRC ENTITY APPROVED SINGLE OR DUAL BARRIER.

5) AVP302 MAY BE MOUNTED WITHIN A CLASS I, DIVISON 2 HAZARDOUS (CLASSIFIED) LOCATION WITHOUT THE FMRC APPROVED ASSOCIATED APPARATUS IF THE POWER SUPPLY RATINGS DO NOT EXCEED THE MAXIMUM VOLTAGE, CURRENT AND POWER RATINGS OF AVP302. THE CLASS I, DIVISON 2 INSTALLATION AND WIRING PRACTICES SHOULD BE IN ACCORDANCE WITH THE NATIONAL ELECTRICAL CODE (ANSI/NFPA 70).

6) TO DETERMINE PROPER MATCHING OF I.S. EQUIPMENT AND THE MAXIMUM WIRING LENGTH USE THE FOLLOWING ENTITY PARAMETER MATCHING FORMULAS,
Voc OR Vt <= Vmax
Isc OR It <= Imax
Ca >= ΣCi + Cw (WIRING)
La >= ΣLi + Lw (WIRING)

7) DUST-TIGHT CONDUIT SEAL SHOULD BE USED WHEN INSTALLED IN CLASS II AND CLASS III ENVIRONMENTS.

8) INTRINSIC SAFE INSTALLATION SHOULD BE IN ACCORDANCE WITH ANSI/ISA RP12.6 "INSTALLATION OF INTRINSICALLY SAFE SYSTEMS FOR HAZARDOUS (CLASSIFIED) LOCATIONS" AND THE NATIONAL ELECTRICAL CODE (ANSI/NFPA 70).

名称 TITLE AVP302 EXTERNAL WIRING FM I.S.			
Azbil Corporation	図番 DWG.NO. 80390982	改番 REV. 04	シート SHT. 1/2
			A3

図番 DWG.NO. 80390982 1/2

9) INSTALLATION OF ALL FMRC APPROVED DEVICES SHALL BE IN ACCORDANCE TO THE MANUFACTURER'S INSTALLATION DRAWINGS WHEN INSTALLING THE EQUIPMENT.

10) THE MAXIMUM CABLE CAPACITANCE (Ca) AND THE MAXIMUM CABLE INDUCTANCE (La) OF THE CONNECTION BETWEEN SFC AND AVP302 ARE AS FOLLOWS;

GAS GROUPS	Ca (uF)	La (mH)
A/B	10.49	69.06
C/D	31.46	254.01
E/F/G	83.89	569.72

11) AEx ib IS SUITABLE ONLY FOR CLASS I, ZONE 1, HAZARDOUS (CLASSIFIED) LOCATIONS AND NOT SUITABLE FOR CLASS I, ZONE 0, AND CLASS I, DIVISION 1 HAZARDOUS (CLASSIFIED) LOCATIONS.

CONSIDERATION OF AN INTRINSICALLY SAFE LOOP BASED ON ENTITY PARAMETERS

THE ENTITY CONCEPT ALLOWS INTERCONNECTION OF INTRINSICALLY SAFE APPARATUS TO ASSOCIATED APPARATUS NOT SPECIFICALLY EXAMINED IN SUCH COMBINATION.

BASICALLY, THE MAXIMUM UNPROTECTED CAPACITANCE (Ci) AND INDUCTANCE (Li) OF THE INTRINSICALLY SAFE APPARATUS, INCLUDING INTERCONNECTING WIRING PARAMETERS (Lw, Cw), MUST BE EQUAL OR LESS THAN THE CAPACITANCE (Ca) AND INDUCTANCE (La) WHICH CAN BE SAFELY CONNECTED TO THE ASSOCIATED APPARATUS. ALSO, THE MAXIMUM OUTPUT PARAMETERS (Voc, Isc, Po) OF THE ASSOCIATED APPARATUS MUST BE EQUAL OR LESS THAN THE MAXIMUM ENTITY PARAMETERS (Vmax, Imax, Pmax) OF THE INTRINSICALLY SAFE APPARATUS.

IF THE HART COMMUNICATOR (HHT) IS CONNECTED TO THE INTRINSICALLY SAFE LOOP, FURTHER CONSIDERATION MUST BE TAKEN AS SHOWN BY THE FOLLOWING EXAMPLES.

EXAMPLE 1. La
MAXIMUM OUTPUT CURRENT (Isum) TO THE LOOP IN THE WORST SITUATION IS THE SUM OF THE DELIVERED CURRENT (Isc) BY THE BARRIER AND THAT (Isc) BY HHT.
IF Isc OF THE BARRIER IS 93mA AND Isc OF HHT IS 32mA, Isum = 93mA + 32mA = 125mA.
THEN, BY APPLYING 130mA (THE NEXT HIGHER VALUE OF THE RESULTING Isum)
TO THE RIGHT TABLE, La FOR GROUP A/B IS DETERMINED : La = 2.00mH.
THE ABOVE OBTAINED La VALUE MUST SATISFY THE BELOW RELATIONSHIP,
La >= Li (AVP302) + Lw (WIRING) + Li (HHT)
ACCORDINGLY, THE WIRING INDUCTANCE NEVER EXCEEDS THE VALUE
La - Li (AVP302) - Li (HHT), i.e. IF Li OF AVP320 IS 0.22mH AND Li OF HHT IS 0mH,
Lw <= 2.00mH - 0.22mH - 0mH = 1.78mH.
NOTE: IF THE ABOVE Lw VALUE IS SMALLER THAN THE INDUCTANCE OF A CABLE, ANOTHER BARRIER WITH A SMALLER Isc VALUE SHOULD BE SELECTED.

EXAMPLE 2. Ca
MAXIMUM OUTPUT VOLTAGE (Vsum) TO THE LOOP IN THE WORST SITUATION IS THE SUM OF THE DELIVERED VOLTAGE (Vos) BY THE BARRIER AND THAT (Voc) BY HHT.
IF Voc OF THE BARRIER IS 28V AND Voc OF HHT IS 1.7V, Vsum = 28V + 1.7V = 29.7V
THEN, BY APPLYING 30V (THE NEXT HIGHER VALUE OF THE RESULTING Vsum)
TO THE RIGHT TABLE, Ca FOR GROUP A/B IS DETERMINED : Ca = 0.12uF.
THE ABOVE OBTAINED Ca VALUE MUST SATISFY THE BELOW RELATIONSHIP,
Ca >= Ci (AVP302) + Cw (WIRING) + Ci (HHT)
ACCORDINGLY, THE WIRING CAPACITANCE NEVER EXCEEDS
THE VALUE Ca - Ci (AVP302) - Ci (HHT), i.e.
IF Ci OF AVP302 IS 0.07uF AND Ci OF HHT IS 0uF,
Cw <= 0.12uF - 0.07uF - 0uF = 0.05uF.
NOTE: IF THE ABOVE Cw VALUE IS SMALLER THAN THE CAPACITANCE OF A CABLE, ANOTHER BARRIER WITH A SMALLER Vos VALUE SHOULD BE SELECTED.

Isum = Isc (ASSOCIATED APPARATUS) + Isc (SMART COMMUNICATOR)

Vsum = Voc (ASSOCIATED APPARATUS) + Voc (SMART COMMUNICATOR)

Isum	La (mH)		
(mA)	A/B	C	D
20	90.00	330.00	700.00
30	40.00	150.00	312.40
40	23.00	87.00	176.30
50	15.00	56.00	113.10
60	10.00	40.00	78.70
70	7.50	28.00	57.90
80	6.00	22.00	44.40
90	5.00	18.00	35.10
100	4.00	15.00	28.50
110	3.00	12.00	23.60
120	2.50	10.00	19.80
130	2.00	9.00	16.90
140	1.60	8.00	14.60
150	1.30	7.00	12.70
160	1.00	6.20	11.20
170	0.80	5.50	9.90
180	0.60	5.00	8.80
200	0.50	4.00	7.20
220	0.40	3.20	5.90

Vsum	Ca (uF)		
(V)	A/B	C	D
5	91.97	275.91	735.77
10	3.21	9.64	25.69
15	0.78	2.35	6.26
20	0.34	1.01	2.70
22	0.26	0.78	2.09
24	0.21	0.63	1.67
26	0.17	0.51	1.37
28	0.14	0.43	1.14
30	0.12	0.36	0.97
32	0.11	0.32	0.84
34	0.09	0.28	0.73
36	0.08	0.24	0.65
38	0.08	0.22	0.58
40	0.06	0.19	0.52
42	0.06	0.18	0.47

名称 TITLE AVP302
EXTERNAL WIRING
FM I.S.

Azbil Corporation | 図番 DWG.NO. 80390982 | 改番 REV. 03 | シート SHT. 2/ | A3

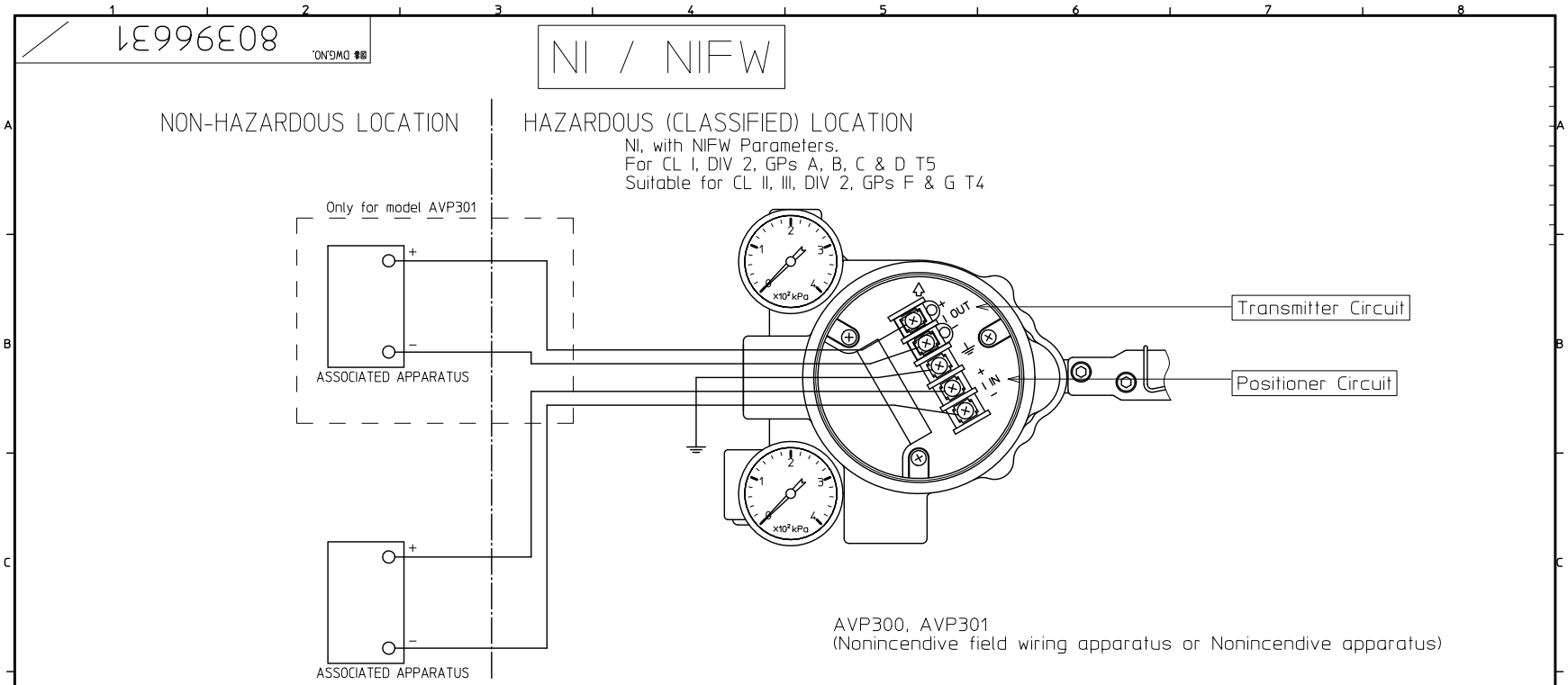

NOTES

1) Approval agency controlled document; no changes without prior agency approval.

2) The Nonincendive field wiring apparatus can be connected only with associated apparatus separately approved.

3) Nonincendive apparatus need not be accompanied by the associated apparatus.

4) NIFW parameters of the apparatus:

AVP300

Positioner Circuit

Vmax = 30V, Imax = 100mA, Pi = 1W, Ci = 18.26nF, Li = 0.22mH

Transmitter Circuit

Vmax = 30V, Imax = 100mA, Pi = 1W, Ci = 0, Li = 0.22mH

AVP301

Positioner Circuit

Vmax = 30V, Imax = 100mA, Pi = 1W, Ci = 18.26nF, Li = 0.22mH

Transmitter Circuit

Vmax = 30V, Imax = 100mA, Pi = 1W, Ci = 22nF, Li = 0.22mH

The parameters permitted for the associated apparatus are referred to its marking or specification.

5) Relevant wiring method of those for hazardous locations specified by the National Electrical Code (ANSI/NFPA70), chapter 5 should be applied to the installation.

6) Control equipment connected to the associated apparatus must not use or generate more than 250V r.m.s or Vdc.

7) Dust-tight conduit seal should be used when installed in class II environment.

8) To make the whole electrical loop NIFW, the following parameter matching formulas must be satisfied.

- Uo < Vmax
- Io < Imax
- Ca > Ci + Cc
- La > Li + Lc

where Uo, Io:
maximum output voltage and current taken from the associated apparatus,
Ca, La:
maximum capacitance and inductance allowed to be connected to the associated apparatus,
Cc, Lc:
specific capacitance and inductance given by the interconnecting cable.

名称 TITLE: AVP300/301 External Wiring FM NI			
Azbil Corporation	図番 DWG.NO. 80396631	改番 REV. 03	シート SHT. /
			A3

NI / NIFW

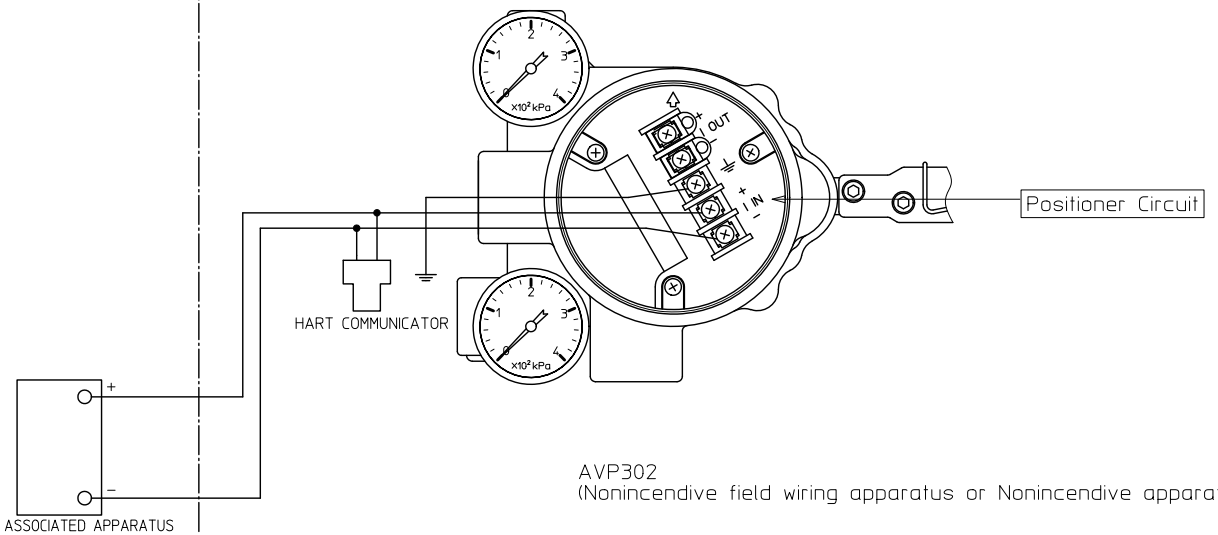

NOTES

1) Approval agency controlled document; no changes without prior agency approval.

2) The Nonincendive field wiring apparatus can be connected only with associated apparatus separately approved.

3) Nonincendive apparatus need not be accompanied by the associated apparatus.

4) NIFW parameters of the apparatus:
   Positioner Circuit
   Vmax = 30V, Imax = 100mA, Pi = 1W, Ci = 41nF, Li = 0.22mH

   Transmitter Circuit
   Vmax = 30V, Imax = 100mA, Pi = 1W, Ci = 0, Li = 0.22mH

   The parameters permitted for the associated apparatus are referred to its marking or specification.

5) Relevant wiring method of those for hazardous locations specified by the National Electrical Code (ANSI/NFPA70), chapter 5 should be applied to the installation.

6) The FM Approvals approved HART Field Communicator can be connected as indicated by the above connection diagram.

7) Control equipment connected to the associated apparatus must not use or generate more than 250V r.m.s or Vdc.

8) Dust-tight conduit seal should be used when installed in class II environment.

9) To make the whole electrical loop NIFW, the following parameter matching formulas must be satisfied.
   - $U_o < V_{max}$
   - $I_o < I_{max}$
   - $C_a > C_i + C_c + C_{HFC}$
   - $L_a > L_i + L_c + L_{HFC}$

where U_o, I_o:
maximum output voltage and current taken from the associated apparatus,
C_a, L_a:
maximum capacitance and inductance allowed to be connected to the associated apparatus,
C_c, L_c:
specific capacitance and inductance given by the interconnecting cable.
C_{HFC}, L_{HFC}:
NIFW parameters Ci and Li of HART Field Communicator.

名称 TITLE AVP302 External Wiring FM NI			
Azbil Corporation	図番 DWG.NO. 80396647	改番 REV. 03	シート SHT. /

A3

[4. ATEX flameproof]

ATEX Flameproof Certifications (English)

1. Marking information

CE 0344 Ex DEKRA 14ATEX0120 X

II 2 G Ex db IIC T6 Gb -40°C ≤ Tamb ≤ +75°C IP66

2. Applicable standards

- EN IEC 60079-0 Electrical apparatus for explosive atmospheres - Part 0: General requirements
- EN 60079-1 Electrical apparatus for explosive atmospheres – Part1: Flameproof enclosure "d"

3. Specific Conditions of Use

- The gap between the rotary shaft and bearing is 0.055mm max. and the width is 14.1mm min.
- The gap between the enclosure and the sensor housing is 0.113mm max. and the width is 19.9mm min.
- The terminal cover has at least 7.5 engaged threads.
- The screw used to assemble the flange to the Ex d housing shall be of class A2-50.
- Use supply wires and cable glands suitable for 5°C above surrounding ambient temperature.

4. Instruction for safe use

4.1 Do not open when an explosive atmosphere is present.

4.2 Cables glands or conduit sealing devices used must be certified for the explosion protection mentioned above in item 1 and suitable for the application temperature.

4.3 Blanking element devices used must be certified for the ATEX explosion protection mentioned above in item1 and suitable for the application temperature.
While this product is shipped with the ATEX certified blanking element only to avoid ingress of solid foreign objects and water during transportation, the certification of this product does not include the banking element.

4.4 If thread adapters are used there must be certified for ATEX application mentioned above in item1 and suitable for the application temperature.

4.5 External grounding connection facility:

- The cable lug should be used so that the conductor with a cross-sectional area of at least 4mm^2 is secured against loosing and twisting and that the contact pressure is permanently secured.
- The cable lug should be between the flat washers.

Certifications antidéflagrantes ATEX (français)

1. Informations de marquage

CE 0344 Ex DEKRA 14ATEX0120 X

II 2 G Ex db IIC T6 Gb -40 °C ≤ Tamb ≤ +75 °C IP66

2. Normes applicables

- EN IEC 60079-0 Atmosphères explosives — Partie 0 : Matériel — Exigences générales
- EN 60079-1 Atmosphères explosives — Partie 1 : Protection du matériel par enveloppes antidéflagrantes «d»

3. Conditions particulières d'utilisation

- L'intervalle entre l'axe de rotation et le palier est au maximum de 0,055 mm et sa largeur est d'au minimum 14,1 mm.
- L'intervalle entre l'enveloppe et le boîtier du capteur est au maximum de 0,113 mm et sa largeur est d'au minimum 19,9 mm.
- Le couvercle de la borne possède au minimum 7,5 fils engagés.
- La vis qui est utilisée pour fixer la bride au boîtier Ex d doit être de la classe A2-50.
- Utiliser des câbles d'alimentation et des presse-étoupes adaptés pour une température supérieure de 5 °C à la température ambiante de l'environnement.

4. Instructions pour une utilisation en sécurité

4.1 Ne pas ouvrir en cas de présence d'une atmosphère explosive.

4.2 Les presse-étoupes ou les dispositifs d'étanchéité des conduits qui sont utilisés doivent être certifiés pour la protection contre les explosions comme décrit précédemment au paragraphe 1 et ils doivent être adaptés à la température d'utilisation.

4.3 Les éléments du dispositif de protection qui sont utilisés doivent être certifiés pour la protection contre les explosions ATEX comme décrit précédemment au paragraphe 1 et ils doivent être adaptés à la température d'utilisation.
Bien que cet article soit expédié avec des éléments de protection certifiés ATEX uniquement dans le but d'éviter la pénétration d'objets solides étrangers et d'eau pendant le transport, la certification de cet article n'inclut pas l'élément de protection.

4.4 Si des adaptateurs de filetage sont utilisés, ils doivent être certifiés pour l'utilisation ATEX comme décrit précédemment au paragraphe 1 et ils doivent être adaptés à la température d'utilisation.

4.5 Équipements de raccord à une prise de terre externe :

- La cosse du câble doit être utilisée afin que le câble conducteur d'une surface de coupe transversale d'au minimum 4 mm^2 soit fixé de manière à empêcher tout desserrage ou torsion et que la pression de contact soit fixée de manière permanente.
- La cosse du câble doit être située entre les rondelles.

ATEX Flammsicherheitsbescheinigung (Deutsch)

1. Kennzeichnungsinformationen

CE 0344 Ex DEKRA 14ATEX0120 X

II 2 G Ex db IIC T6 Gb -40 °C ≤ Tamb ≤ +75 °C IP66

2. Gültige Normen

- EN IEC 60079-0 Explosionsgefährdete Bereiche — Teil 0: Betriebsmittel — Allgemeine Anforderungen
- EN 60079-1 Explosionsfähige Atmosphäre — Teil 1: Geräteschutz durch druckfeste Kapselung „d“

3. Besondere Nutzungsbedingungen

- Der Zwischenraum zwischen der Drehachse und dem Kugellager ist maximal 0,055 mm und die Breite ist minimal 14,1 mm.
- Der Zwischenraum zwischen dem Gehäuse und dem Sensorgehäuse ist maximal 0,113 mm und die Breite ist minimal 19,9 mm.
- Mindestens 7,5 Gewindegänge der Anschlussabdeckung sind eingeschraubt.
- Zur Befestigung des Flansches am Ex d Gehäuse soll eine Klasse A2-50 Schraube verwendet werden.
- Die mitgelieferten, für eine Umgebungstemperatur von 5 °C und darüber geeigneten Kabel und Kabelverschraubungen verwenden.

4. Anleitungen zum sicheren Gebrauch

4.1 Nicht in Gegenwart einer explosiven Atmosphäre öffnen.

4.2 Kabelverschraubungen oder Kabelrohrdichtungen müssen entsprechend dem oben unter Posten 1 genannten Explosionsschutz zertifiziert und für die Einsatztemperatur geeignet sein.

4.3 Verschlusselementgeräte müssen entsprechend dem oben unter Posten 1 genannten ATEX Explosionsschutz zertifiziert und für die Einsatztemperatur geeignet sein.
Dieses Produkt wird nur mit einem zertifizierten ATEX Verschlusselement versandt, um beim Transport das Eindringen von Fremdkörpern oder Wasser zu vermeiden, aber die Zertifizierung des Produktes schließt dieses Verschlusselement nicht ein.

4.4 Bei Verwendung von Gewindeadaptern müssen diese für die oben unter Posten 1 genannten ATEX Anwendungen zertifiziert und für die Einsatztemperatur geeignet sein.

4.5 Externe Erdungseinrichtung:

- Der Kabelschuh sollte so eingesetzt werden, dass damit ein gegenüber Kontaktverlust und Verdrehung geschützter Leiter mit einer Querschnittfläche von mindestens 4 mm² gewährleistet und der Kontaktdruck permanent aufrechterhalten wird.
- Der Kabelschuh sollte zwischen zwei flachen Unterlegscheiben liegen.

Certificazione antideflagrante ATEX (Italiano)

1. Informazioni marcatura

CE 0344 Ex DEKRA 14ATEX0120 X

II 2 G Ex db IIC T6 Gb -40°C ≤ Tamb ≤ +75°C IP66

2. Standard applicabili

- EN IEC 60079-0	Apparecchiature elettriche per atmosfere esplosive - Parte 0: Requisiti generali
- EN 60079-1	Apparecchiature elettriche per atmosfere esplosive – Parte 1: Involucro antideflagrante "d"

3. Condizioni specifiche d'uso

- La distanza tra l'albero rotativo e il cuscinetto è di 0,055mm max. e la larghezza è di 14,1mm min.
- La distanza tra l'involucro e l'alloggiamento del sensore è di 0,113mm max. e la larghezza è di 19,9mm min.
- Il coperchio terminale ha almeno 7,5 filetti in presa.
- La vite utilizzata per assemblare la flangia all'alloggiamento Ex d deve essere di classe A2-50.
- Utilizzare i cavi e i passacavi in dotazione idonei per temperatura ambiente al di sopra di 5°C.

4. Istruzioni per un utilizzo sicuro

4.1 Non aprire in presenza di un'atmosfera esplosiva.

4.2 I passacavi e i dispositivi di sigillatura dei condotti utilizzati devono essere certificati per la protezione contro le esplosioni citata alla voce 1 e adatti per la temperatura di applicazione.

4.3 I dispositivi di elemento di chiusura utilizzati devono essere certificati ATEX per la protezione contro le esplosioni citata alla voce 1 e adatti per la temperatura di applicazione. Questo prodotto viene spedito con l'elemento di chiusura certificato ATEX esclusivamente per evitare l'ingresso di corpi estranei solidi e di acqua durante il trasporto, la certificazione di questo prodotto non comprende l'elemento di chiusura.

4.4 Se si utilizzano adattatori filettati questi devono essere certificati per l'applicazione ATEX citata alla voce 1 e adatti per la temperatura di applicazione.

4.5 Impianto di collegamento a terra esterno:

- Il capocorda deve essere utilizzato in modo che il conduttore con una sezione di almeno $4mm^2$ non possa allentarsi né torcersi e che la pressione di contatto sia sempre assicurata.
- Il capocorda deve essere fra le rondelle piane.

ATEX-certificering voor explosieveiligheid (Nederlands)

1. Informatie over markeringen

CE 0344 Ex DEKRA 14ATEX0120 X

II 2 G Ex db IIC T6 Gb -40°C ≤ Tomg ≤ +75°C IP66

2. Geldende normen

- EN IEC 60079-0 Explosieve atmosferen — Deel 0: Elektrisch materieel — Algemene eisen
- EN 60079-1 Explosieve atmosferen — Deel 1: Bescherming van materieel door drukvast omhulsel „d”

3. Specifieke gebruiksvoorwaarden

- De afstand tussen de roterende as en het lager is max. 0,055 mm en de breedte is min. 14,1 mm.
- De afstand tussen het omhulsel en de sensorbehuizing is max. 0,113 mm en de breedte is min. 19,9 mm.
- De afdekplaat is voorzien van minstens 7,5 ingrijpende schroefdraden.
- De schroef die dient om de flens aan de Ex-d-behuizing te bevestigen moet klasse A2-50 zijn.
- Gebruik voedingskabels en kabelwartels die geschikt zijn voor een temperatuur die 5°C hoger is dan de omgevingstemperatuur.

4. Instructies voor een veilig gebruik

4.1 Niet openen in aanwezigheid van een explosieve atmosfeer.

4.2 Kabelwartels of doorvoerdichtingssystemen moeten gecertificeerd zijn voor de explosiebeveiliging vermeld onder punt 1 hierboven en geschikt voor de toepassingstemperatuur.

4.3 Afsluitdoppen moeten gecertificeerd zijn voor de ATEX-explosiebeveiliging vermeld onder punt 1 hierboven en geschikt voor de toepassingstemperatuur.
Dit product wordt geleverd met een ATEX-gecertificeerde afsluitdop, maar deze dient alleen om het binnendringen van vaste vreemde voorwerpen en water tijdens het transport te voorkomen. De certificering van dit product is exclusief de afsluitdop.

4.4 Bij gebruik van schroefdraad adapter moeten deze gecertificeerd zijn voor ATEXtoepassingen zoals vermeld onder punt 1 hierboven en geschikt voor de toepassingstemperatuur.

4.5 Externe aardingsinrichting:

- Maak gebruik van een kabelschoen zodat de geleider met een dwarsdoorsnede van minstens 4 mm^2 beveiligd is tegen verlies en verdraaiing, en de contactdruk permanent gewaarborgd is.
- De kabelschoen dient zich tussen de platte ringen in te bevinden.

ATEX Certificações de Antideflagrante (Português)

1. Informações de marcação

CE 0344 Ex DEKRA 14ATEX0120 X

II 2 G Ex db IIC T6 Gb -40°C ≤ Tamb ≤ +75°C IP66

2. Normas aplicáveis

- EN IEC 60079-0 Atmosferas explosivas — Parte 0: Requisitos gerais
- EN 60079-1 Atmosferas explosivas — Parte 1: Proteção do equipamento por invólucros antideflagrantes «d»

3. Condições Específicas de Utilização

- A distância entre o eixo rotatório e a chumaceira é no máximo 0,055 mm e a largura no mínimo 14,1 mm.
- A distância entre o invólucro e o cárter do sensor é no máximo 0,113 mm e a largura no mínimo 19,9 mm.
- O capô do terminal tem pelo menos 7,5 fios engatados.
- O parafuso utilizado para montar o rebordo no cárter Ex d tem de ser da classe A2-50.
- Utilizar fios de alimentação e empanques de cabo convenientes para um ambiente com temperatura superior a 5°C.

4. Instrução para utilização segura

4.1 Não abrir na presença de uma atmosfera explosiva.

4.2 Os empaques de cabos ou dispositivos de vedação de conduto utilizados precisam ser certificados para proteção contra explosão mencionada acima no item 1 e ser convenientes para a temperatura de aplicação.

4.3 Os dispositivos do elemento de obturação utilizados precisam ser certificados para proteção contra explosão ATEX mencionada acima no item 1 e ser convenientes para a temperatura de aplicação.

Ainda que o presente produto seja fornecido com elemento de obturação ATEX certificado somente para evitar a entrada de corpos estranhos sólidos e de água durante o transporte, a certificação deste produto não inclui a do elemento de obturação.

4.4 Se forem utilizados adaptadores de fios, estes precisam ser certificados para a aplicação ATEX mencionada acima no item 1 e ser convenientes para a temperatura de aplicação.

4.5 Instalação de conexão de cabo de ligação à terra externa:

- O terminal de cabo deve ser utilizado de modo que o condutor, com uma área de secção transversal de no mínimo 4 mm^2, tenha segurança garantida contra afrouxamento e torção e que a pressão de contacto seja garantida de modo permanente.
- O terminal de cabo deve estar situado entre as arruelas chatas.

Certificaciones ATEX a prueba de explosiones (español)

1. Información de marcado

CE 0344 Ex DEKRA 14ATEX0120 X

II 2 G Ex db IIC T6 Gb -40 °C ≤ Tamb ≤ +75 °C IP66

2. Normas aplicables

- EN IEC 60079-0 Atmósferas explosivas. Parte 0: Equipo. Requisitos generales.
- EN 60079-1 Atmósferas explosivas. Parte 1: Protección del equipo por envolventes antideflagrantes «d».

3. Condiciones específicas de uso

- La abertura entre el eje rotatorio y el cojinete es de un máximo de 0,055 mm y la anchura es de un mínimo de 14,1 mm.
- La abertura entre el cierre y la caja del sensor es de un máximo de 0,113 mm y la anchura es de un mínimo de 19,9 mm.
- La cubierta del terminal tiene al menos 7,5 roscas acopladas.
- El tornillo usado para ensamblar la brida a la caja Ex d debe ser de la clase A2-50.
- Use collarines de hilos y cables de alimentación adecuados para una temperatura ambiente circundante superior a 5 °C.

4. Instrucciones para uso seguro

4.1 No lo abra cuando haya una atmósfera explosiva.

4.2 Los collarines de cables y los dispositivos de cierre de los conductos usados deben tener la certificación de protección antideflagrante mencionada en el punto 1 y ser adecuados para la temperatura de aplicación.

4.3 Los dispositivos de los elementos de aislamiento deben tener la certificación ATEX de protección antideflagrante mencionada en el punto 1 y ser adecuados para la temperatura de aplicación.
Este producto se envía con el elemento de aislamiento con la certificación ATEX únicamente para evitar la entrada de objetos sólidos extraños o agua durante el transporte, pero la certificación de este producto no incluye el elemento de aislamiento.

4.4 Si se usan adaptadores de rosca, deben tener la certificación ATEX de la aplicación mencionada en el punto 1 y ser adecuados para la temperatura de aplicación.

4.5 Unidad de conexión de tierra externa:

- La lengüeta de conexión del cable debe usarse de modo que el conductor con un área transversal de al menos 4 mm^2 quede asegurado para evitar conexiones sueltas y torsiones y de forma que la presión de contacto esté garantizada permanentemente.
- La lengüeta del cable debe estar entre las arandelas planas.

[5. ATEX intrinsically safe and dust-ignition protection]

Marking information

CE 0344

II 1 G Ex ia IIC T4 Ga; -40 °C ≤ Tamb ≤ +60 °C
II 1 D Ex ia IIIC T_{200}135 °C Da; -40 °C ≤ Tamb ≤ +50 °C
IP66
Certificate No.: KEMA 00ATEX1111 X

Electrical Parameter

Model AVP300
Supply/input: Ui = 30 V, Ii = 100 mA, Pi = 1 W, Ci = 5 nF, Li = 0.22 mH
Monitoring/output: Ui = 10 V, Ii = 100 mA, Pi = 1 W, Ci = 1 nF, Li = 0.22 mH

Model AVP301
Supply/input: Ui = 30 V, Ii = 100 mA, Pi = 1 W, Ci = 5 nF, Li = 0.22 mH
Monitoring/output: Ui = 30 V, Ii = 100 mA, Pi = 1 W, Ci = 22 nF, Li = 0.22 mH

Model AVP302
Supply/input: Ui = 30 V, Ii = 100 mA, Pi = 1 W, Ci = 41 nF, Li = 0.22 mH
Monitoring/output: Ui = 7.8 V, Ii = 100 mA, Pi = 0.78W, Ci = 1 nF, Li = 0 mH

Applicable standards

European Standards:
EN IEC 60079-0:2018
EN 60079-11:2012

Special conditions for safe use

1. For application in explosive atmospheres caused by air/dust mixtures
   (1) the surface temperature is determined for a dust layer with a thickness of 5 mm maximum,
   (2) conduit or cable glands must be selected and used in such a way that a degree of protection of IP6x is guaranteed.
2. When the enclosure of the Smart Valve Positioner is made of aluminium, if it is mounted in an area where the use of category 1 G apparatus is required, it must be installed such, that, even in the event of rare incidents, ignition sources due to impact and friction sparks are excluded.
3. For the use in the area where category 1 D apparatus is required, electrostatics discharge shall be avoided.

⚠Caution

- Use the ATEX intrinsic safety explosion-proof model device with a barrier that satisfies the specifications below.

Input signal circuit:	Model AVP300/301	Ui = 30 V, Ii = 100 mA, Pi = 1 W, Ci = 5 nF, Li = 0.22 mH
	Model AVP302	Ui = 30 V, Ii = 100 mA, Pi = 1 W, Ci = 41 nF, Li = 0.22 mH
Travel transmission circuit:		
	Model AVP301	Ui = 30 V, Ii = 100 mA, Pi = 1 W, Ci = 22 nF, Li = 0.22 mH

- Make sure that dust exceeding 5 mm does not accumulate on the surface of the enclosure.
- Use a metallic conduit or cable gland that satisfies IP66.

[6. CCC flameproof]

CCC 隔爆

1. 防爆标志

Ex db IIC T6 Gb

2. 国家防爆标准

GB/T 3836.1-2021 爆炸性环境 第 1 部分：设备 通用要求

GB/T 3836.2-2021 爆炸性环境 第 2 部分：由隔爆外壳“d”保护的设备

3. 产品安全使用特殊条件

3.1 使用额定环境温度高于周围环境温度 5℃的电源线和电缆引入装置。

3.2 涉及隔爆接合面的维修须联系产品制造商。

3.3 隔爆结合面用特殊紧固件性能等级为 A2-50。

3.4 使用环境温度：-40℃ ~+75℃。

4. 产品使用注意事项

4.1 产品外壳设有接地端子，用户在安装使用时应可靠接地。

4.2 产品使用环境温度范围为： - 40℃ ~ + 75℃。

4.3 现场安装时，电缆引入须选用国家指定的防爆检验机构检验认可、具有防爆等级为 Ex db IIC 的电缆引入装置或堵封件，冗余电缆引入口须用堵封件有效密封。电缆引入装置或封堵件安装后，须确保设备整体外壳防护等级不低于 IP66。使用密封堵封，请使用 CCC 认证的产品。

4.4 现场使用和维护时必须严格遵守“存在爆炸性环境时严禁打开”的原则。

4.5 安装现场不应存在对铝合金有腐蚀作用的气体。

4.6 用户不得自行更换该产品的零部件，应会同产品制造商共同解决运行中出现的故障，以杜绝损坏现象的发生。

4.7 产品现场使用时，其表面应定期进行清扫，但不得使用压缩空气吹扫。

4.8 产品的安装、使用和维护应同时遵守产品说明书及下列相关标准、规范的要求：

GB/T 3836.13-2021 爆炸性环境 第 13 部分：设备的修理、检修、修复和改造

GB/T 3836.15–2017 爆炸性环境 第 15 部分：电气装置的设计、选型和安装

GB/T 3836.16–2017 爆炸性环境 第 16 部分：电气装置的检查与维护

GB 50257–2014 电气装置安装工程爆炸和火灾危险环境 电气装置施工及验收规范

5. CCC型号

AVP3xy- ①②③④⑤

where:

x=0(normal positioner)

x=3(valve travel transmitter only)

y=0(Positioner& SFN communication)

y=1(Positioner& Valve travel transmitter with SFN communication)

y=2(Positioner with HART communication& SFN communication)

y=7(Positioner with HART commutation& Valve travel transmitter)

			Code
		(Air Pipes, Conduit Connection)	
① Structure	CCC Flameproof	(1/4NPT, 1/2NPT)	B
	CCC Flameproof	(1/4NPT, M20×1.5)	N
	CCC Flameproof + Intrinsically Safe	(1/4NPT, 1/2NPT)	R
	CCC Flameproof + Intrinsically Safe	(1/4NPT, M20×1.5)	W
② Finish	Standard		S
	Corrosion Proof		B
	Standard		A
	Corrosion Proof		C
	Silver Finish		D
③ Posirioner Action	Direct Action		D
	Reverse Action		R
		(Pressure Gauge Scale, Max. Regulator Setting)	
④ Supply Air-pressuer Classification	140 ≦ Ps ≦ 150kPa	(200kPa, 400kPa)	1
	150 ≦ Ps ≦ 300kPa	(400kPa, 400kPa)	2
	300 ≦ Ps ≦ 400kPa	(600kPa, 400kPa)	3
	400 ≦ Ps ≦ 450kPa	(600kPa, 700kPa)	4
	450 ≦ Ps ≦ 700kPa	(1000kPa, 700kPa)	5
	Without supply pressure		X
⑤ Pressuer Units	kPa		A
	kgf/cm²		B
	Mpa		C
	bar		D
	psi		E

[7. CCC intrinsically safe]

CCC 本安防爆

1. 防爆标志

Ex ia IIC T4 Ga

Ex ia IIIC T_{200}135℃ Da

2. 国家防爆标准

GB/T 3836.1-2021 爆炸性环境 第 1 部分：设备 通用要求

GB/T 3836.4-2021 爆炸性环境 第 4 部分：由本质安全型“i”保护的设备

3. 产品安全使用特殊条件

3.1 当产品安装于要求 EPL Ga 级的场所时，用户须采取有效措施防止产品外壳由于冲击或摩擦引起的点燃危险。

3.2 产品在爆炸性粉尘环境使用时，应采取措施避免传播型刷型放电产生引燃危险。仅允许使用湿布擦拭。

3.3 关联设备应优先选用隔离式安全栅；如选用齐纳式安全栅，应符合 GB/T 3836.15-2017 标准关于本安电路接地的要求。

3.4 使用环境温度：-40℃ ~+60℃（Ex ia IIC T4 Ga）

-40℃ ~+50℃（Ex ia IIIC T_{200}135℃ Da）

4. 产品使用注意事项

4.1 产品的使用环境温度范围与 EPL 别的关系如下表所示：

EPL 别	使用环境温度范围
Ga	-40℃ ~ +60℃
Da	-40℃ ~ +50℃

4.2 产品必须与经防爆认可的关联设备配套共同组成本安防爆系统方可使用于现场存在爆炸性气体混合物的危险场所。其系统接线必须同时遵守智能阀门定位器和所配关联设备的使用说明书要求，接线端子不得接错。本安电气参数及最大内部等效参数如下：

型号	端子号	最高输入电压 Ui (V)	最大输入电流 Ii (mA)	最大输入功率 Pi (W)	最大内部等效参数	
					Ci(nF)	Li(mH)
AVP300	+/- IN	30	100	1	5	0.22
	+/- OUT	10	100	1	1	0.22
AVP301	+/- IN	30	100	1	5	0.22
	+/- OUT	30	100	1	22	0.22
AVP302	+/- IN	30	100	1	41	0.22
	+/- OUT	7.8	100	0.78	1	0
AVP307	+/- IN	30	100	1	5	0.22
	+/- OUT	30	100	1	22	0.22

4.3 用户不得自行更换该产品的零部件，应会同产品制造商共同解决运行中出现的故障，以杜绝损坏现象的发生。

4.4 用户应当保持产品外壳表面清洁，以防粉尘堆积，但严禁用压缩空气吹扫。

4.5 产品的安装、使用和维护应同时遵守产品说明书及下列相关标准、规范的要求：

GB/T 3836.13-2021 爆炸性环境 第 13 部分：设备的修理、检修、修复和改造

GB/T 3836.15–2017 爆炸性环境 第 15 部分：电气装置的设计、选型和安装

GB/T 3836.16–2017 爆炸性环境 第 16 部分：电气装置的检查与维护

GB/T 3836.18–2017 爆炸性环境 第 18 部分：本质安全电气系统

GB 15577–2018 粉尘防爆安全规程

GB 50257–2014 电气装置安装工程爆炸和火灾危险环境 电气装置施工及验收规范

5. CCC型号

AVP3xy- ①②③④⑤

where:

x=0(normal positioner)

x=3(valve travel transmitter only)

y=0(Positioner& SFN communication)

y=1(Positioner& Valve travel transmitter with SFN communication)

y=2(Positioner with HART communication& SFN communication)

y=7(Positioner with HART commutation& Valve travel transmitter)

			Code
① Structure		(Air Pipes, Conduit Connection)	
	CCC Flameproof	(1/4NPT, 1/2NPT)	B
	CCC Flameproof	(1/4NPT, M20×1.5)	N
	CCC Flameproof + Intrinsically Safe	(1/4NPT, 1/2NPT)	R
	CCC Flameproof + Intrinsically Safe	(1/4NPT, M20×1.5)	W
② Finish	Standard		S
	Corrosion Proof		B
	Standard		A
	Corrosion Proof		C
	Silver Finish		D
③ Posirioner Action	Direct Action		D
	Reverse Action		R
④ Supply Air-pressuer Classification		(Pressure Gauge Scale, Max. Regulator Setting)	
	140 ≦ Ps ≦ 150kPa	(200kPa, 400kPa)	1
	150 ≦ Ps ≦ 300kPa	(400kPa, 400kPa)	2
	300 ≦ Ps ≦ 400kPa	(600kPa, 400kPa)	3
	400 ≦ Ps ≦ 450kPa	(600kPa, 700kPa)	4
	450 ≦ Ps ≦ 700kPa	(1000kPa, 700kPa)	5
	Without supply pressure		X
⑤ Pressuer Units	kPa		A
	kgf/cm²		B
	Mpa		C
	bar		D
	psi		E

[8. IECEx flameproof]

IECEx Flameproof Certifications

1. Marking information

IECEx KEM 06.0015X

Ex db IIC T6 Gb −40°C ≤ Tamb ≤ +75°C IP66

2. Applicable standards

- IEC 60079-0 Explosive atmospheres - Part 0: Equipment - General requirements
- IEC 60079-1 Explosive atmospheres - Part 1: Equipment protection by flameproof enclosures "d"

3. Specific Conditions of Use

- The gap between the rotary shaft and bearing is 0.055 mm max. and the width is 14.1 mm min..
- The gap between the enclosure and the sensor housing is 0.113 mm max. and the width is 19.9 mm min.
- The terminal cover has at least 7.5 engaged threads.
- The screw used to assemble the flange to the Ex d housing shall be of class A2-50.
- Use supply wires and cable glands suitable for 5°C above surrounding ambient temperature.

4. Instruction for safe use

4.1 Do not open when an explosive atmosphere is present.

4.2 Cables glands or conduit sealing devices used must be certified for the IECEx.

4.3 Explosion protection mentioned above in item 1 and suitable for the application temperature.

4.4 Blanking element devices used must be certified for the IECEx explosion protection mentioned above in item1 and suitable for the application temperature.

4.5 While this product is shipped with the IECEx certified blanking element only to avoid ingress of solid foreign objects and water during transportation, the certification of this product does not include the banking element.

4.6 If thread adapters are used these must be certified for IECEx protection mentioned above in item 1 and suitable for the application temperature.

4.7 External grounding connection facility:

- The cable lug should be used so that the conductor with a cross-sectional area of at least 4mm^2 is secured against loosing and twisting and that the contact pressure is permanently secured.
- The cable lug should be between the flat washers.

[9. IECEx intrinsically safe and dust-ignition protection]

Marking information

Ex ia IIC T4 Ga; -40 °C ≤ Tamb ≤ +60 °C
Ex ia IIIC T_{200}135 °C Da; -40 °C ≤ Tamb ≤ +50 °C
IP66
Certificate No.: IECEx DEK15.0057X

Electrical Parameter

Model AVP300

Supply/input: Ui = 30 V, Ii = 100 mA, Pi = 1 W, Ci = 5 nF, Li = 0.22 mH
Monitoring/output: Ui = 10 V, Ii = 100 mA, Pi = 1 W, Ci = 1 nF, Li = 0.22 mH

Model AVP301
Supply/input: Ui = 30 V, Ii = 100 mA, Pi = 1 W, Ci = 5 nF, Li = 0.22 mH
Monitoring/output: Ui = 30 V, Ii = 100 mA, Pi = 1 W, Ci = 22 nF, Li = 0.22 mH

Model AVP302
Supply/input: Ui = 30 V, Ii = 100 mA, Pi = 1 W, Ci = 41 nF, Li = 0.22 mH
Monitoring/output: Ui = 7.8 V, Ii = 100 mA, Pi = 0.78 W, Ci = 1 nF, Li = 0 mH

Applicable standards

IEC Standards:
IEC 60079-0:2017
IEC 60079-11:2011

Special conditions for safe use

1. For application in explosive atmospheres caused by air/dust mixtures
   (1) the surface temperature is determined for a dust layer with a thickness of 5 mm maximum,
   (2) conduit or cable glands must be selected and used in such a way that a degree of protection of IP6x is guaranteed.
2. When the enclosure of the Smart Valve Positioner is made of aluminium, if it is mounted in an area where the use of EPL Ga apparatus is required, it must be installed such, that, even in the event of rare incidents, ignition sources due to impact and friction sparks are excluded.
3. For the use in the area where EPL Da apparatus is required, electrostatics discharge shall be avoided.

⚠Caution

- Use the IECEx intrinsic safety explosion-proof model device with a barrier that satisfies the specifications below.

  Input signal circuit: Model AVP300/301
  Ui = 30 V, Ii = 100 mA, Pi = 1 W, Ci = 5 nF, Li = 0.22 mH
  Model AVP302
  Ui = 30 V, Ii = 100 mA, Pi = 1 W, Ci = 41 nF, Li = 0.22 mH

  Travel transmission circuit:
  Model AVP301
  Ui = 30 V, Ii = 100 mA, Pi = 1 W, Ci = 22 nF, Li = 0.22 mH
- Make sure that dust exceeding 5 mm does not accumulate on the surface of the enclosure.
- Use a metallic conduit or cable gland that satisfies IP66.

[10. CNS flameproof]

CNS 防爆設備（耐壓）

Ex db IIC T6 Gb
1 2 3 4 5

1：防爆認證

2：隔爆

3：爆炸性氣體環境歸類為 IIC

4：著火點為 85 ℃或其以上的氣體環境

5：設備防護等級
基於機器有可能成為起火點而區分的保護級別

環境溫度：-40 ℃ 至 +75 ℃
防塵防水性能：IP66
本機可設置的危險場所：Zone 1 或 2 的危險場所

特殊使用條件
· 旋轉軸與軸承之間的間隙最大為 0.055 mm，寬度最小為 13.9 mm。
· 外殼與傳感器之間的間隙最大為 0.11 mm，寬度最小為 19.8 mm。
· 接線盒背蓋至少有 7 圈的咬合螺紋。
· 在耐壓容器法蘭（角度感測器）上安裝固定螺絲時，請使用強度類別在 A2-50 以上的螺絲。

安全使用須知
· 使用可在高於產品安裝環境最高 5℃以上的溫度下使用的電纜及電纜接地。

⚠警告

當 AVP 正在運作時，請不要打開端子蓋。請不要打開端子蓋或鬆開將角度傳送器固定在 AVP 上的螺絲，否則可能會點燃爆炸性氣體。

⚠警告

· 在設備訊號線的入口必須設置電纜密封壓蓋。
· 必須使用經過，符合 Ex db IIC 的電纜和 1/2NPT 或 M20x1.5 的螺絲。
· 若忽視上述注意事項，將無法保證規格的防護類型。必須保證設備的外部接地端子妥善接地。
· 防止外殼或端子盒蓋發生腐蝕、變形或損壞，栓緊固定蓋子的螺絲，當設備正在運轉時請勿打開外蓋。
· 安裝、操作和維修之前請務必閱讀本使用說明書進行接線時，請務必遵守台灣相關法令的規定和標準。

[11. CNS intrinsically safe]

CNS 防爆設備（本安）

1. 防爆等級內容

型式檢定合格字號 (ITRI)2017 第 07-00125X 號

防爆規格標示 Ex ia IIC T4 Ga -40 ℃ ≤ Tamb ≤ +60 ℃

Ex ia IIIC T_{200}135 ℃ Da -40 ℃ ≤ Tamb ≤ +50 ℃

2. 依據標準

IEC 60079-0

IEC 60079-11

3. 電氣規格

AVP300 型

電源 / 輸入電路

Ui=30 V，Ii=100 mA，Pi=1 W，Ci=5 nF，Li=0.22 mH

監控 / 輸出電路

Ui=10 V，Ii=100 mA，Pi=1 W，Ci=1 nF，Li=0.22 mH

IP66

AVP301 型

電源 / 輸入電路

Ui=30 V，Ii=100 mA，Pi=1 W，Ci=5 nF，Li=0.22 mH

監控 / 輸出電路

Ui=30 V，Ii=100 mA，Pi=1 W，Ci=22 nF，Li=0.22 mH

IP66

AVP302 型

電源 / 輸入電路

Ui=30 V，Ii=100 mA，Pi=1 W，Ci=41 nF，Li=0.22 mH

監控 / 輸出電路

Ui=7.8 V，Ii=100 mA，Pi=0.78 W，Ci=1 nF，Li=0 mH

IP66

4. 特殊條件

- 檢定範圍未包含電纜入口保護裝置，應正確使用合格的電纜入口保護裝置以維持設備保護型式之完整性。
- 本設備鋁製外殼安裝於需 EPL Ga 區域使用時，應避免外殼碰撞或摩擦。
- 本設備安裝於需 EPL Da 區域使用時，應避免傳導刷放電。

[12. KCs flameproof (Main unit model number "H")]

KCs 내압방폭

1. 기호 정보

Ex d IIC T6 -40° C ≤ Tamb ≤ +75° C IP66

2. 적용 가능한 표준

고용노동부 고시 제 2020-33 호

IEC 60079-0:2017 (Ed.7)

IEC 60079-1:2014 (Ed.7)

3. 설치지침

3.1 폭발성 환경에서는 열지 않는다 .

3.2 5℃가 넘는 주위온도에 적합한 전원 케이블과 케이블 그랜드를 사용한다 .

3.3 사용되는 케이블 그랜드 또는 전선관 봉인장치는 상기 1 에 언급된 KCs 내압방폭의 인증을 받은 것이어야 하며 적용 온도에 적합해야 한다 ..

3.4 블랭킹 부품은 상기 1 항에 언급된 KCs 내압방폭 인증을 받은 것을 사용해야 하며 , 적용 온도에 적합해야 한다 .

본 제품은 IECEx 인증 블랭킹 부품과 함께 배송되지만 , 이는 운송 과정에서 단단한 이물질이나 물이 들어가는 것을 피하기 위함이며 본 제품의 인증에는 블랭킹 부품을 포함하지 않는다 .

3.5 나사형 어답터를 사용하는 경우 , 상기 1 항에 언급된 KCs 내압방폭 인증을 받은 것 으로서 적용 온도에 적합한 것이어야 한다 .

3.6 외부 접지 설비 :

- 케이블 러그는 전도체의 단면적이 $4mm^2$ 이상일 때는 반드시 사용해야 하며 , 헐거워 지거나 비틀어지지 않도록 고정하고 영구적인 접점압력을 유지하도록 한다 .
- 케이블 러그는 평와셔 사이에 설치하여야 한다 .

4. 특정 사용조건

4.1 로터리 샤프트와 베어링의 간격은 0.055mm 이하이고 폭은 14.1mm 이상이다 .

4.2 외장과 센서 덮개의 간격은 0.113mm 이하이고 폭은 19.9mm 이상이다 .

4.3 단자함에는 적어도 7.5 개 이상의 나사산이 들어있다 .

4.4 플랜지를 Ex d 하우징에 조립할 때 사용하는 나사는 A2-50 등급이어야 한다 .

[13. NEPSI flameproof]

NEPSI 隔爆外壳认证

1. 标志资讯

GYJ20.1182X

Ex db IIC T6 Gb -40 ℃ ≤ Tamb ≤ +75 ℃

2. 适用的标准

-GB/T 3836.1-2021

-GB/T 3836.2-2021

3. 产品安全使用特殊条件

防爆合格证号后缀“X”表明产品具有安全使用特殊条件，具体内容如下：

1. 涉及隔爆外壳的维护、维修时需咨询制造厂，索取并参考带有隔爆面参数的文件。
2. 隔爆接合面紧固件性能等级为 A2-50。
3. 产品使用环境温度范围为：-40 ℃～ +75 ℃。

4. 产品使用注意事项

1. 产品外壳设有接地端子，用户在安装使用时应可靠接地。
2. 现场安装时，电缆引入口须选用国家指定的防爆检验机构检验认可、具有防爆等级为 Ex db IIC Gb 的电缆引入装置或堵封件，冗余电缆引入口须用堵封件有效密封。
3. 现场使用和维护时必须严格遵守“严禁带电开盖”的原则。
4. 安装现场不应存在对铝合金有腐蚀作用的气体。
5. 用户不得自行更换该产品的零部件，应会同产品制造商共同解决运行中出现的故障，以杜绝损坏现象的发生。
6. 产品的安装、使用和维护应同时遵守产品说明书及下列相关标准、规范的要求：
   GB/T 3836.13–2021 爆炸性环境 第 13 部分：设备的修理、检修、修复和改造
   GB/T 3836.15–2017 爆炸性环境 第 15 部分：电气装置的设计、选型和安装
   GB/T 3836.16–2022 爆炸性环境 第 16 部分：电气装置的检查与维护
   GB 50257–2014 电气装置安装工程爆炸和火灾危险环境 电气装置施工及验收规范

[14. NEPSI intrinsically safe]

NEPSI 本质安全和防粉尘点燃外壳认证

1. 标志资讯

GYJ22.1954X

Ex ia IIC T4 Ga; -40 ℃ ≤ Tamb ≤ +60 ℃ ;

Ex ia IIIC T_{200}135 ℃ Da; -40 ℃ ≤ Tamb ≤ +50 ℃

2. 适用的标准

-GB/T 3836.1-2021

-GB/T 3836.4-2021

3. 产品安全使用特殊条件

防爆合格证号后缀“X”表明产品具有安全使用特殊条件，具体内容如下：

1. 当产品安装于要求 EPL Ga 级的场所时，用户须采取有效措施防止产品外壳由于冲击或摩擦引起的点燃危险。
2. 当产品安装于爆炸性粉尘环境时，用户须采取有效措施防止产品外壳产生传播型刷形放电的危险。
3. 产品使用环境温度范围如下：
   气体：-40 ℃ ~ +60 ℃；粉尘 -40 ℃ ~ +50 ℃。

4. 产品使用注意事项

1. 产品必须与经防爆认可的关联设备配套共同组成本安防爆系统方可使用于现场存在爆炸性气体混合物的危险场所。其系统接线必须同时遵守智能阀门定位器和所配关联设备的使用说明书要求，接线端子不得接错。本安电气参数及最大内部等效参数如下：

型号	端子号	最高输入电压 Ui (V)	最大输入电流 Ii (mA)	最大输入功率 Pi (W)	最大内部等效参数	
					Ci (nF)	Li (mH)
AVP300	+/- IN	30	100	1	5	0.22
	+/- OUT	10	100	1	1	0.22
AVP301	+/- IN	30	100	1	5	0.22
	+/- OUT	30	100	1	22	0.22
AVP302	+/- IN	30	100	1	41	0.22
	+/- OUT	7.8	100	0.78	1	0
AVP307	+/- IN	30	100	1	5	0.22
	+/- OUT	30	100	1	22	0.22

2. 用户不得自行更换该产品的零部件，应会同产品制造商共同解决运行中出现的故障，以杜绝损坏现象的发生。
3. 产品的安装、使用和维护应同时遵守产品说明书及下列相关标准、规范的要求：
   GB/T 3836.13–2021 爆炸性环境 第 13 部分：设备的修理、检修、修复和改造
   GB/T 3836.15–2017 爆炸性环境 第 15 部分：电气装置的设计、选型和安装
   GB/T 3836.16–2022 爆炸性环境 第 16 部分：电气装置的检查与维护
   GB 50257–2014 电气装置安装工程爆炸和火灾危险环境 电气装置施工及验收规范
   GB/T 3836.18–2017 爆炸性环境 第 18 部分：本质安全电气系统

6.2 Notes on Discontinued Explosion-Proof Models

Introduction

The explosion-proof models described in this section are no longer certified or sold.

You can continue to refer to this user's manual for instructions on how to handle your positioner.

For notes on explosion-proof models not listed, please contact our branch offices, sales offices, or your local sales agents.

[1. EAC Flameproof (discontinued)]

Select an installation location for an EAC flameproof model in accordance with the following criteria.

- Hazardous areas in which this device can be installed are defined as follows.

[Zone 1 or 2 hazardous area]

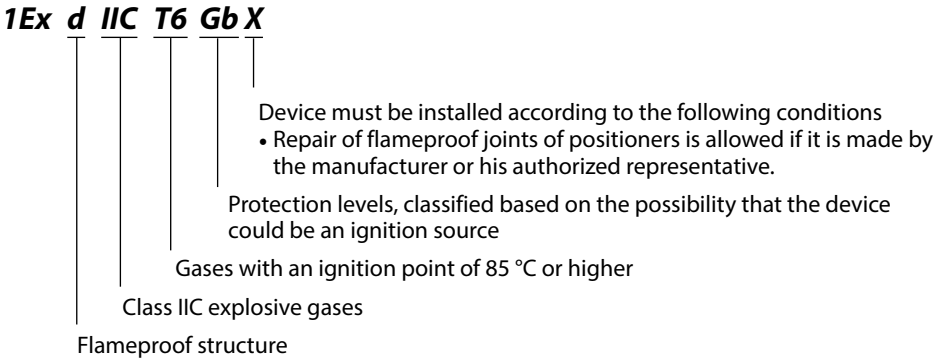

Ambient temperature range: −40 to +75 °C

⚠Warning

- Fasten the cover sufficiently tightly, and do not under any circumstances remove it with the power on if there is an explosive atmosphere surrounding the device. Doing so can cause an explosion to occur.

⚠Caution

- For the cable-pulling equipment to be used at the device's signal line exit ports, use Ex d IIC-certified products. IP66 waterproof and dust-proof performance can be assured by installing an appropriate cable gland.
- When using the device, give sufficient consideration to preventing corrosion, deformation, damage, etc., with respect to the products case, cover, and the like.
- Wiring work should strictly follow the domestic rules of each country.

Взрывозащищенное исполнение в соответствии с техническим регламентом ТР ТС 012/2011 «О безопасности оборудования для работы во взрывоопасных средах»

1. Маркировка

ЕАЭС RU C-JP.EX01.B.00075/19

1Ex d IIC T6 Gb X -40 °C ≤ Ta ≤ +75 °C IP66

2. Применяемые стандарты

- ГОСТ 31610.0-2014 (IEC 60079-0:2011)
- ГОСТ IEC 60079-1-2011

3. Специальные условия применения

- Зазор между вращающимся валом и подшипником должен быть не больше 0,055 мм, а ширина — не меньше 14,1 мм.
- Зазор между корпусом изделия и корпусом датчика должен быть не больше 0,113 мм, а ширина — не меньше 19,9 мм.
- Крышка клеммной коробки должна быть закручена по резьбе как минимум на 7,5 оборотов.
- Для крепления фланца к оболочке Ex d следует использовать винты класса A2-50.
- Корпуса позиционеров способны накапливать электростатический заряд, поэтому они должны устанавливаться в местах, где риск электростатического разряда сведен к минимуму.
- Ремонт взрывонепроницаемых соединений позиционеров допускается, если он произведен изготовителем или его уполномоченным представителем.

4. 4. Инструкции для безопасной эксплуатации

4.1 Не открывайте корпус при наличии взрывоопасной атмосферы.

4.2 Используйте подходящие кабели и кабельные вводы с температурным диапазоном на 5°C выше температуры окружающей среды.

4.3 Чтобы обеспечить степень защиты не ниже IP66 в соответствии со стандартом IEC60529, необходимо использовать и правильно устанавливать подходящие кабельные вводы, уплотнения кабелепроводов и заглушки.

4.4 Используемые кабельные вводы и уплотнения кабелепровода должны иметь соответствующий сертификат взрывозащиты и должны быть пригодны для применения при температуре эксплуатации изделия.

4.5 Используемые заглушки должны соответствующий сертификат взрывозащиты и должны быть пригодны для применения при температуре эксплуатации изделия.

4.6 Данное изделие комплектуется заглушкой с сертификатом IECEx лишь для предотвращения попадания внутрь посторонних предметов и воды во время транспортировки, и эта заглушка не включается в сертификацию изделия.

4.7 Если используются резьбовые переходники, они должны иметь соответствующий сертификат взрывозащиты и должны быть пригодны для применения при температуре эксплуатации изделия.

4.8 Внешнее заземляющее устройство:

- Необходимо монтировать кабельный наконечник таким образом, чтобы исключить ослабление или коробление соединения со временем и обеспечить надежное крепление проводника сечением не менее 4 кв. мм.
- С обеих сторон кабельного наконечника должны быть установлены плоские шайбы.

[2. EAC Intrinsically safe (discontinued)]

Select an installation location for an EAC intrinsically safe model in accordance with the following criteria.

- Hazardous areas in which this device can be installed are defined as follows.

[Zone 0, 1, or 2 hazardous area]

0Ex ia IIC T4 Ga X

Device must be installed according to the following conditions
- The positioner case is made of aluminum alloy, therefore, when installing the positioners in zone 0, in order to avoid the risk of fire from friction sparks generated during friction or impact of parts, it is necessary to protect the case from mechanical shock.
- Positioners do not pass the 500 V test between the intrinsically safe circuit and the housing according to clause 6.3.13 of GOST 31610.11-2014(IEC 60079-11: 2011) This must be taken into account for the correct installation of positioners.

Protection levels, classified based on the possibility that the device could be an ignition source

Gases with an ignition point of 135 °C or higher

Class IIC explosive gases

Intrinsically safe explosion-proof structure

Ex ia IIIC T135 °C Da X

Device must be installed according to the following conditions
- The positioner enclosures are capable of storing electrostatic charge, so they should be installed in places where the risk of electrostatic discharge is minimized.

Protection levels, classified based on the possibility that the device could be an ignition source

Maximum temperature of the device surface : 135°C

Class IIIC explosive dust

Intrinsically safe explosion-proof structure

Ambient temperature range: −40 to +60 °C

⚠Caution

- Use the EAC intrinsic safety explosion-proof model device with a barrier that satisfies the specifications below.

  Input signal circuit:
  - Model AVP300/301
    - Ui = 30 V, Ii = 100 mA, Pi = 1 W, Ci = 5 nF, Li = 0.22 mH
  - Model AVP302
    - Ui = 30 V, Ii = 100 mA, Pi = 1 W, Ci = 41 nF, Li = 0.22 mH

  Travel transmission circuit:
  - Model AVP301
    - Ui = 30 V, Ii = 100 mA, Pi = 1 W, Ci = 22 nF, Li = 0.22 mH
- Use metallic conduit or cable gland that satisfies IP66.

Искробезопасное исполнение в соответствии с техническим регламентом ТР ТС 012/2011 «О безопасности оборудования для работы во взрывоопасных средах»

1. Маркировка

ЕАЭС RU C-JP.EX01.B.00075/19

0Ex ia IIC T4 Ga X -40°C < Ta < +60°C IP66

Ex ia IIIC T135°C Da X -40°C < Ta < +60°C IP66

Электрический параметр

Модель AVP300

+/-IN: Ui = 30 В, Ii = 100 мА, Pi = 1 Вт, Ci = 5 нФ, Li = 0,22 мГн

+/-OUT: Ui = 10 В, Ii = 100 мА, Pi = 1 Вт, Ci = 1 нФ, Li = 0,22 мГн

Модель AVP301

+/-IN: Ui = 30 В, Ii = 100 мА, Pi = 1 Вт, Ci = 5 нФ, Li = 0,22 мГн

+/-OUT: Ui = 30 В, Ii = 100 мА, Pi = 1 Вт, Ci = 22 нФ, Li = 0,22 мГн

Модель AVP302

+/-IN: Ui = 30 В, Ii = 100 мА, Pi = 1 Вт, Ci = 41 нФ, Li = 0,22 мГн

+/-OUT: Ui = 7,8 В, Ii = 100 мА, Pi = 0,78 Вт, Ci = 1 нФ, Li = 0 мГн

2. Применяемые стандарты

- ГОСТ 31610.0-2014 (IEC 60079-0:2011)
- ГОСТ 31610.11-2014 (IEC 60079-11:2011)

3. Специальные условия применения

3.1 Для применения в условиях взрывоопасной атмосферы, вызванной присутствиемпылевоздушных смесей,

(1) температура поверхности определяется при слое пыли толщиной не более 5 мм,

(2) Чтобы обеспечить степень защиты IP66 в соответствии со стандартом IEC 60529, необходимо использовать и правильно устанавливать подходящие кабельные вводы, уплотнения кабелепроводов и заглушки.

3.2 Корпуса позиционеров способны накапливатьэлектростатический заряд, поэтому они должны устанавливаться в местах, где риск электростатического разряда сведен к минимуму

3.3 Корпус позиционеров выполнен из алюминиевого сплава, поэтому при установке позиционеров в зоне 0, во избежание опасности возгорания от фрикционных искр, образующихся при трении или соударении деталей, необходимо оберегать корпус от механических ударов.

3.4 Позиционеры не выдерживают испытание на электрическую прочность 500 В между искробезопасной цепью и корпусом согласно п. 6.3.13 ГОСТ 31610.11-2014 (IEC 60079-11:2011). Это должно учитываться для правильного монтажа позиционеров.

Appendix A: Specifications

Model AVP300/301/302

LIST OF FEATURES

Item	Function
Desired input signal range	Any split-range value can be specified.
Forced fully open/closed	The control valve can be fully closed or opened securely when the desired percentage of input signal is reached.
Desired flow characteristics	The relationship between input signal and valve travel that is appropriate for the process can be defined by using a 16-point line graph.
Travel transmission (option)	Valve motion can be reliably monitored by transmitting the valve travel.

FUNCTIONAL SPECIFICATIONS

Item		Specification
Applicable actuator		Pneumatic single and double acting, linear and rotary motion actuator
Input signal		4–20 mA DC (Configurable to any required range for split range.) Minimum driving current: 3.85 mA *1
Communication system		SFN communication (Model AVP300/301/302) HART6 communication (Model AVP302)
Output signal		4–20 mA DC (Travel transmission) *2
Input resistance		300 Ω typically / 20 mA DC (Model AVP300/AVP301 Waterproof, Flameproof) 350 Ω typically / 20 mA DC (Model AVP300/AVP301 FM/CCC/ATEX/CNS Intrinsically safe) 400 Ω typically / 20 mA DC (Model AVP302)
Lightning protection		Peak value of voltage surge: 12 kV Peak value of current surge: 1000 A
Flow characteristics		Linear, Equal percentage, Quick opening Custom user characteristics (16 points)
Manual operation		Auto/Manual external switch (Not available for double acting actuator)
Supply air pressure		140 to 700 kPa
Air consumption	For single acting actuator	4 L/min (N) or less: with steady supply air pressure of 140 kPa {1.4 kgf/cm^2} and output of 50 % 5 L/min (N) or less: with steady supply air pressure of 280 kPa {2.8 kgf/cm^2} and output of 50 % 6 L/min (N) or less: with steady supply air pressure of 500 kPa {5.0 kgf/cm^2} and output of 50 %
	For double acting actuator	10 L/min (N) or less: with steady supply air pressure of 400 kPa {4.0 kgf/cm^2}
Output balanced pressure		55±5 % for double acting actuator only (without a load, and when output air pressure is balanced)
Maximum air deliver flowrate	For single acting actuator	110 L/min (N) maximum at 140 kPa {1.4 kgf/cm^2}
	For double acting actuator	250 L/min (N) maximum at 400 kPa {4.0 kgf/cm^2}
Air connections		Rc1/4 or 1/4NPT internal thread
Electrical connections		G1/2, 1/2NPT or M20×1.5 internal thread
Ambient temperature limits		General, FM Explosionproof, FM Intrinsically safe models : -40 to +80 °C TIIS / KCs (main unit model number “S”) Flameproof models : -20 to +55 °C ATEX / KCs (main unit model number “H”) / IECEx / CCC / CNS Flameproof models : -40 to +75 °C ATEX / CCC / CNS Intrinsically safe models : -40 to +60 °C
Ambient humidity limits		10 to 90 %RH
Vibration characteristics		20 m/s^2, 5 to 400 Hz (with standard mounting kit on Azbil Corporation’s HA actuator)
Finish		Standard finish and silver finish: Baked acrylic Corrosion proof finish: Baked Urethane
Color		Silver/Dark Gray or Dark Blue
Material		Cast aluminum
Weight		2.5 kg. (3.2 kg with a pressure regulator with filter model KZ03) (If combined with a reversing relay for a double-acting actuator, add 0.3 kg to the weight.)
Performance	Accuracy	±1.0 % F.S.(±2.5 % with user-defined flow characteristics) ±3.0 % F.S. if the feedback lever angle is outside the ±4° to ±20° range (see Table 6) There is an additional 0.5 % FS (input error) if 4 mA ≤ input signal span < 8 mA
	Travel transmission accuracy *2	±1 % F.S. (±2.5 % with user-defined flow characteristics)
	Stroke coverage	14.3 to 100 mm Stroke (Feedback Lever Angle ±4° to ±20°)

Item	Specification	
Enclosure classification	JIS C0920 watertight, NEMA type 4X, IP66	
Structure	TIIS Flameproof	Ex d IIC T6 Gb
	KCs Flameproof	Ex d IIC T6 Flameproof cable gland and Stopping plug must be KCs Ex d IIC approved.
	FM Explosionproof	Explosionproof: Class I, Division 1, Group A, B, C, D Dust-ignition: Class II, Division 1, Group E, F, G Suitable: Class III, Division 1 Flameproof: Class I, Zone 1, AEx d IIC T6 at T_{amb}< 80 °C NEMA Type 4X The wiring conduit cable gland and electrical wiring must be compliant with the National Electrical Code (NEC).
	FM Intrinsically safe	Intrinsically safe: Class I, II, III, Division 1, Group A, B, C, D, E, F, G, T4 Intrinsically safe: Class I, Zone 0, AEx ia IIC T4 Nonincendive: Class I, Division 2, Group A, B, C, D, T5 Suitable: Class II, III, Division 2, Groups F, G, T4 NEMA Type 4X, IP66 The barriers should be FM recognized types and comply with the following conditions as follows: Input circuit(terminals ±IIN) Model AVP300/AVP301: 12.02≤V_{max}≤30 V, I_{max}=100mA, Pi=1 W, Ci=18.26 nF, Li=0.22 mH Model AVP302: 12.02≤V_{max}≤30 V, I_{max}=100 mA, Pi=1 W, Ci=41 nF, Li=0.22 mH Output circuit(terminals ±OUT) Model AVP301: V_{max}=30 V, I_{max}=100 mA, Pi=1 W, Ci=22 nF, Li=0.22 mH Installation should comply with NEC.
	ATEX Flameproof	II 2 G Ex db IIC T6 Gb −40°C≤T_{amb}≤+75°C IEC IP66 Flameproof cable gland must be ATEX Ex db IIC approved. *Note: IP66 waterproof and dust-proof performance can be assured by installing an appropriate cable gland.*
	ATEX Intrinsically safe	II 1 G Ex ia IIC T4 Ga; −40°C≤T_{amb}≤+60°C II 1 D Ex ia IIIC T_{200} 135°C Da; −40°C≤T_{amb}≤+50°C IEC IP66 The barriers should be ATEX certified types and comply with the following condition as follows: Input circuit (terminals ±IIN) Model AVP300/AVP301: Ui=30 V, Ii=100 mA(resistively limited), Pi=1 W, Ci=5 nF, Li=0.22 mH Model AVP302: Ui=30 V, Ii=100 mA(resistively limited), Pi=1 W, Ci=41 nF, Li=0.22 mH Output circuit (terminals ±IOUT) Model AVP301: Ui=30 V, Ii=100 mA(resistively limited), Pi=1 W, Ci=22 nF, Li=0.22 mH
	CCC Flameproof	Ex db IIC T6 Gb Flameproof cable gland must be CCC Ex d IIC approved.
	CCC Intrinsically safe	Ex ia IIC T4 Ga; -40°C≤T_{amb}≤+60°C Ex ia IIIC T_{200}135°C Da; -40°C≤T_{amb}≤+50°C The barriers should be CCC certified types and comply with the following condition as follows: Input circuit (terminals ±IIN) Model AVP300/AVP301: Ui=30 V, Ii=100 mA, Pi=1 W, Ci=5 nF, Li=0.22 mH Model AVP302: Ui=30 V, Ii=100 mA, Pi=1 W, Ci=41 nF, Li=0.22 mH Output circuit (terminals ±IOUT) Model AVP301: Ui=30 V, Ii=100 mA, Pi=1 W, Ci=22 nF, Li=0.22 mH
	Combination of CCC Flameproof and Intrinsically safe	When used as CCC Flameproof, it complies CCC Flameproof approval as above. When used as CCC Intrinsically safe, it complies CCC Intrinsically safe approval as above.
	IECEx Flameproof	Ex db IIC T6 Gb IEC IP66 Flameproof cable gland must be IECEx Ex db IIC approved. *Note: IP66 waterproof and dust-proof performance can be assured by installing an appropriate cable gland.*

Item	Specification	
Structure	CNS Flameproof	Ex db IIC T6 Gb IEC IP66 Flameproof cable gland must be CNS Ex db IIC approved. *Note: IP66 waterproof and dust-proof performance can be assured by installing an appropriate cable gland.*
	CNS Intrinsically safe	Ex ia llC T4 Ga IEC IP66 The barriers should be CNS certified types and comply with the following condition as follows: Input circuit (terminals ±IIN) Model AVP300/AVP301: Ui=30 V, Ii=100 mA, Pi=1 W, Ci=5 nF, Li=0.22 mH Model AVP302: Ui=30 V, Ii=100 mA, Pi=1 W, Ci=41 nF, Li=0.22 mH Output circuit (terminals ±IOUT) Model AVP301: Ui=30 V, Ii=100 mA, Pi=1 W, Ci=22 nF, Li=0.22 mH
CE Marking	EN 61326-1: 2013 (EMC), EN IEC 63000:2018 (RoHS)	
Configuration tools	Field Communication Software (Model CFS100)	

**1 In case of model AVP301 when signal input is less than 3.85 mA, output current will be burnout(up or down (indefinite)).*

**2 This applies only to positioners with travel transmission (model AVP301). In this case, a power supply circuit for travel transmission is required.*

Note: Depending on the inner diameter and length of the air pipe, automatic setup might not be sufficient to realize the optimum operation. In such a case, please specify the relevant parameters.

Conditions of supply air (JIS C 1805-1 (2001))

Item	Specification
Particles	Maximum diameter 3 μmm
Oil mist	Less than 1 ppm at mass
Humidity of the air supply	The dew point should be at least 10°C lower than the temperature of this device.

To meet the above specifications for instrument air, install the air purification devices listed below properly in the specified installation location.

Examples of air purification devices

Installation	Air purification device	SMC corporation	CKD corporation
Compressor outlet or main line	Line filter	AFF series	AF series
	Mist separator	AM series	
Terminal device	Mist separator	AM150 or AM250 series	M3000S type

Model AVP200/201/202

List of Features

Item	Function
Desired input signal range	Any split-range value can be specified.
Forced fully open/closed	The control valve can be fully closed or opened securely when the desired percentage of input signal is reached.
Desired flow characteristics	The relationship between input signal and valve travel that is appropriate for the process can be defined by using a 15-point broken line.
Travel transmission (option)	Valve motion can be reliably monitored by transmitting the valve travel.

Standard Specifications

Item	Specification
Applicable actuator	Pneumatic single and double acting, linear and rotary motion actuator
Input signal	4-20 mA DC (Configurable to any required range for split range minimum span 4 mA DC.) Minimum driving current: 3.85 mA *1
Communication system	SFN communication (Model AVP200/201) HART6 communication *2 (Model AVP202)
Output signal	4-20 mA DC (Travel transmission)
Input resistance	300 Ω typically / 20 mA DC (Model AVP200/AVP201) 400 Ω typically / 20 mA DC (Model AVP202)
Lightning protection	Peak value of voltage surge: 12 kV Peak value of current surge: 1000 A
Flow characteristics	Linear, Equal percentage, Quick opening Custom user characteristics (15 segments)
Manual operation	Auto/Manual external switch (For single acting actuator only)
Supply air pressure	140 to 700 kPa
Air consumption	for single acting actuator 4 L/min (N) or less: with steady supply air pressure of 140 kPa {1.4 kgf/cm^2} and output of 50 % 5 L/min (N) or less: with steady supply air pressure of 280 kPa {2.8 kgf/cm^2} and output of 50 % 6 L/min (N) or less: with steady supply air pressure of 500 kPa {5.0 kgf/cm^2} and output of 50 % for double acting actuator 10 L/min (N) or less: with steady supply air pressure of 400 kPa {4.0 kgf/cm^2}
Output balanced pressure	55±5% for double acting actuator only
Maximum air deliver flowrate	for single acting actuator 110 L/min (N) maximum at 140 kPa {1.4 kgf/cm^2} for double acting actuator 250 L/min (N) maximum at 400 kPa {4.0 kgf/cm^2}
Air connections	Rc1/4 or 1/4NPT internal thread
Electrical connections	G1/2, 1/2NPT or M20 × 1.5 internal thread
Ambient temperature limits	-40 to +80 °C for general model TIIS Flameproof: -20 to +55 °C
Ambient humidity limits	10 to 90 %RH
Vibration characteristics	Body: 20 m/s^2, 5 to 400 Hz Valve travel detector: 100 m/s^2, 5 to 2000 Hz (with standard mounting kit on Azbil Corporation's HA actuator)
Finish	Standard finish and silver finish: Baked acrylic Corrosion proof finish: Baked Urethane
Color	Silver/Dark Gray or Dark Blue
Material	Body case: Cast aluminum Case of valve travel detector: Stainless steel Cable: Polyvinyl chloride for ambient temperature up to 80 °C

<table>
<tr><th colspan="2">Item</th><th>Specification</th></tr>
<tr><td colspan="2">Weight</td><td>Body
For single acting actuator
Without Pressure regulator with filter: 3.3 kg
With Pressure regulator with filter model KZ03: 4.0 kg
For double acting actuator
Without Pressure regulator with filter: 3.6 kg
With Pressure regulator with filter model KZ03: 4.3 kg

Valve travel detector: 1.0 kg
Cable: 0.2 kg/m
Outer diameter: 9.8 mm
Sheath material: PDC (PVC)</td></tr>
<tr><td rowspan="3">Performance</td><td>Accuracy</td><td>±1 % F.S. (±2.5% with custom output characteristics)
Depending on cable length, the accuracy varies as follows:
<table>
<tr><th>Cable length</th><th>Accuracy</th></tr>
<tr><td>5 m</td><td>±1.2 % F.S.</td></tr>
<tr><td>10 m</td><td>±1.7 % F.S.</td></tr>
<tr><td>20 m</td><td>±2.7 % F.S.</td></tr>
</table>
For 4 mA ≤ input signal span < 8 mA, ±1.5 % F.S.
Note) Depend on the air pipe diameter, or pipe length, the auto setup program will not properly operate.</td></tr>
<tr><td>Travel transmission accuracy</td><td>±1 % F.S. (±2.5% with output characteristics modification)
Only for travel transmission type (model AVP201)</td></tr>
<tr><td>Stroke coverage</td><td>14.3 to 100 mm Stroke (Feedback Lever Angle ±4° to ±20°)</td></tr>
<tr><td colspan="2">Enclosure classification</td><td>JIS C0920 watertight</td></tr>
<tr><td colspan="2">Stracture</td><td>TIIS Flameproof Body: Ex d IIC T6 Approval No.TC17094
Valve travel detector: Ex d IIC T6 Approval No.TC20454</td></tr>
<tr><td colspan="2">Configuration tools</td><td>Field Communication Software CommStaff Model CFS100</td></tr>
</table>

*1. *For models with a travel transmission function (AVP201), if the input signal falls below this value, the travel transmission output holds at the upscale or downscale (undefined) burnout current.*

*2. *The KC mark is not required for this product if HART communication is not continuously used. Therefore, in Korea, do not use HART communication continuously.*

Conditions of supply air (JIS C 1805-1 (2001))

Item	Specification
Particles	Maximum diameter 3 μmm
Oil mist	Less than 1 ppm at mass
Humidity of the air supply	The dew point should be at least 10 °C lower than the temperature of this device.

To meet the above specifications for instrument air, install the air purification devices listed below properly in the specified installation location.

Examples of air purification devices

Installation	Air purification device	SMC corporation	CKD corporation
Compressor outlet or main line	Line filter	AFF series	AF series
	Mist separator	AM series	
Terminal device	Mist separator	AM150 or AM250 series	M3000S type

Model Number Configuration

Model Selection

Basic model number

		-	(1)	(2)	(3)	(4)	(5)
AVP300	Analog signal (4 to 20 mA DC) without position transmission						
AVP301	Analog signal (4 to 20 mA DC) with position transmission						
AVP302	Analog signal (4 to 20 mA DC) HART protocol						

(1) Main unit model number		(Air pipes, conduit connections)	
	Water-proof	(Rc 1/4, G1/2)	X
	Water-proof	(1/4 NPT, 1/2 NPT)	P
	Water-proof	(1/4 NPT, M20×1.5)	Q
	TIIS Flameproof with one flameproof cable gland *1	(Rc 1/4, G1/2)	E
	KCs Flameproof	(1/4 NPT, 1/2 NPT)	H
	FM Explosionproof and Flameproof	(1/4 NPT, 1/2 NPT)	F
	FM Intrinsically safe	(1/4 NPT, 1/2 NPT)	M
	FM Intrinsically safe	(1/4 NPT, G1/2)	6
	ATEX Flameproof	(1/4 NPT, M20×1.5)	C
	ATEX Flameproof	(1/4 NPT, 1/2 NPT)	Y
	ATEX Intrinsically safe	(1/4 NPT, M20×1.5)	L
	ATEX Intrinsically safe	(1/4 NPT, 1/2 NPT)	U
	ATEX Intrinsically safe	(Rc 1/4, G1/2)	V
	CCC Flameproof	(1/4 NPT, 1/2 NPT)	B
	CCC Flameproof	(1/4 NPT, M20×1.5)	N
	CCC Intrinsically safe and Flameproof	(1/4 NPT, 1/2 NPT)	R
	CCC Intrinsically safe and Flameproof	(1/4 NPT, M20×1.5)	W
	IECEx Flameproof	(1/4 NPT, 1/2 NPT)	J
	IECEx Flameproof	(1/4 NPT, M20×1.5)	G
	CNS Flameproof	(1/4 NPT, 1/2 NPT)	D
	CNS Flameproof	(1/4 NPT, M20×1.5)	1
	CNS Intrinsically safe	(1/4 NPT, M20×1.5)	Z
	CNS Intrinsically safe	(1/4 NPT, 1/2 NPT)	0
(2) Finish	Standard (Silver/Dark Gray)		A
	Corrosion proof (Silver/Dark Gray)		C
	Standard (Dark Blue)		S
	Corrosion proof (Dark Blue)		B
	Silver finish		D
(3) Positioner action *2	Direct Action (standard) - Air pressure increases with Control signal increase		D
	Reverse Action (reverse positioning) Airpressure decreases with Control signal increase		R
(4) Supply air pressure type		(Pressure gauge scale, Max regulator setting)	
	140 ≤ Ps ≤ 150 kPa	(200 kPa, 400 kPa)	1
	150 < Ps ≤ 300 kPa	(400 kPa, 400 kPa)	2
	300 < Ps ≤ 400 kPa	(600 kPa, 400 kPa)	3
	400 < Ps ≤ 450 kPa	(600 kPa, 700 kPa)	4
	450 < Ps ≤ 700 kPa	(1000 kPa, 700 kPa)	5
(5) Pressure units	kPa		A
	(kgf/cm^2) *3		(B)
	MPa		C
	bar		D
	(psi) *3		(E)

*1. *If you need two flameproof cable glands for model AVP301, select option code "B".*

*2. *When the input signal (power) is shut off, select direct action to make the output air pressure of this device zero, and reverse action to make the output at the maximum air pressure (supply air pressure). Positioner action differs from actuator and control valve action, so be careful in selecting the positioner's action.*
If double acting actuator are using, not available code "R".

*3. *Items in parentheses are for overseas use. As such, they cannot be used in Japan.*

Individual specifications

Following shows default and optional settings of each configurable parameter of AVP.

Unless otherwise specified, the Smart Valve Positioner will be shipped in the following configuration.

Input control signal	4 to 20 mA	The minimal span for custom range = 4 mA
Output characteristic *1	Liner	EQ or QO can be ordered or set by user.
Valve action *2	Direct (Push down to close)	Reverse (Push down to open) can be ordered or set by use
Output signal for position transmission	4 to 20 mA	DE also selectable

**1. Refer to the following when selecting the input/output characteristics.*

**2. Positioner action differs from actuator and control valve action, so be careful in selecting the positioner's action.*

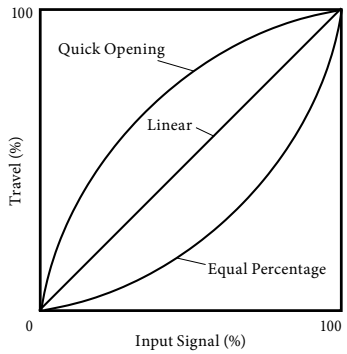

Figure 1. Input-output characterization

Selection of input characterization

The flow characteristic of a control valve is set by selecting the valve plug characteristic, and the input-output characteristics of the positioner must be specified as linear. However, if the valve plug flow characteristic, which depends on the control valve's shape and structure, does not meet requirements, you can correct the overall flow characteristic of the control valve by specifying "equal percentage" or "quick opening" for the input-output characteristics of the positioner, as shown in Table 1.

Table 1. Control valve flow characteristics correction by the positioner

Characteristic of valve plug	Input-output characterization of positioner	Overall flow characteristic of control valve
Linear	Quick opening	Quick opening
Linear	EQ%	EQ%
EQ%	Quick opening	Linear

Note: If the valve plug characteristic is "quick opening," the overall flow characteristic of the control valve cannot be linear even if "equal percentage" is set for the positioner's input-output characteristics. (This is because when the valve plug characteristic is "quick opening," the control valve works as an ON/OFF valve and it is difficult to correct its characteristics by changing the setting of the positioner.)

		Accessory Selection	-	(6)	(7)	(8)	(9)	-	(10)
(6) Regulator with filter		Without regulator		X					
		With model KZ03 regulator (attached to main unit) *1		1					
		With model KZ03 regulator (with mounting plate for separate installation)		2					
(7) Mounting bracket material (mounting plate/bolts)		No mounting plate			X				
		SUS304 / SUS304			D				
(8)(9) Mounting bracket for attachment to actuator *9		No mounting plate				XX			
	Single-acting actuators	PA2, 3				YH			
		PSA1, PSA2, PSK1				YS			
		PA4, 5, New model PSA3, 4 (produced after 2000), VA1 to 3 (produced after May. '83)				YQ			
		PSA3, PSA4 for existing valves produced on/before 1999				YY			
		PSA6, VA4 to 6 (produced after May. '83)				YL			
		PSA7				Y8			
		HA1				YA			
		HA2, HA3, HL2, HL3				YT			
		HA4, HL4				YN			
		HK1, VM1 *2				YK			
		VM12 for model VSP *3				YB			
		VR1				YV			
		VR2, VR3				YR			
		VR3H				Y6			
		RSA1				YF			
		RSA2				YU			
		GOM 83S, GOM 84S, GOM 103S				YG			
		GOM 124S				YM			
		VA1 to 3 (produced before Apr. '83, former model Motion Connector), 800-1, 2, 3 *4				YW			
		VA4, 5 (produced before Apr. '83, former model Motion Connector), 800-4, 5 *4				YJ			
		Actuators of other manufacturers				See Table 2			
	Double-acting actuators	VP5, 6 *5				Y1			
		VP7 *5				Y7			
		SLOP560, 1000, 1000X *5 (stroke : 100mm max)				Y2			
		SLOP1500, 1500X *5 (stroke : 100mm max)				Y3			
		DAP560, 1000, 1000X *5 (stroke : 100mm max)				Y4			
		DAP1500, 1500X *5 (stroke : 100mm max)				Y5			
		DAP560 (VFR : 8 to 12B)				LA			
		DAP560 (VFR : 14B, 16B)				LB			
		DAP560 (VDC, VDN, VST : 16B)				LC			
		DAP1000, 1000X (VDC, VDN, VST : 16B)				LD			
		DAP1500, 1500X (VDC, VDN, VST : 16B)				LE			
		GOM64LM, 84LM (springless, vertical, double acting) *6				GA			
		GOM64LM, 84LM (springless, vertical, double acting) *7				GB			
		GOM124LM (springless, vertical, double acting) *6				GC			
		GOM124LM (springless, vertical, double acting) *7				GD			
		Actuators of other manufacturers				See Table 3			
(10) Option		None							X
		Explosion-proof universal elbow (SUS304 G1/2) 1 piece							A
		Flameproof cable gland (G1/2) 1 piece (TIIS flameproof for Model AVP301 only)							B
		Explosion-proof universal elbow (SUS304 G1/2) 2 pieces							C
		Mounting screw Unify (5/16-18UNC) (Electrical conduit connection only supports 1/2NPT)							T
		Double-acting reversing relay *8							W

*1. *Select the code "1" only when the direction of drain of the pressure regulator with filter on the control valve is downward(ground).*
*2. *In case "VM" type actuator is required following conditions, 1. select model "VCT" for the body, 2. the existing positioner should be HEP or VPE, 3. yoke should be model HK. If another spec. is required, contact your sales representative.*
*3. *Additional support bracket is required.*
*4. *Consult with sales representative in case of no mounting hole on the side of valve yoke.*
*5. *In case of double acting actuator, a reversing relay unit required.*
*6. *In case of valve body is not butterfly valve of Azbil Corporation.*
*7. *In case of valve body is butterfly valve of Azbil Corporation.*
*8. *If reverse action is selected for positioner action, this option cannot be selected.*
*9. *Accuracy differs depending on the actuator stroke (see Table 6).*

Table 2. Mounting bracket for single acting actuator

(8)(9) Mounting bracket for pneumatic actuator	Code
Motoyama Mfg. 2800 series 240, 280, 330, Nihon Koso A100 series 270, 320 *	TA
Motoyama Mfg. 2800 series 400, 500S, 500L,Nihon Koso A100 series 400, 500 *	TB
Motoyama Mfg. 2800 series 650S, 650L*	TC
Motoyama Mfg. 2800 series 240, 280, 330 (with side manual handle)	TD
Motoyama Mfg. 2800 series 400, 500S, 500L (with side manual handle)	TE
Motoyama Mfg. 2800 series 650S, 650L (with side manual handle)	TF
Motoyama Mfg. 3800 series (multi-spring type) N24, N28, N33S	TJ
Motoyama Mfg. 2922 series (Gyrol-I) G.R.I 280H, 330H, 400HS, 400H, 500H	TL
Motoyama Mfg. 3993 series (Gyrol-II) 2911-1M series 280, 330, 400	TG
Nihon Koso 5100L series 240, 280 *	TP
Nihon KOSO 5100L Series 330,400,5200LA Series 400 *	TQ
Nihon Koso 5200L series 218, 270, 350 *	TR
NIHON KOSO 5200LA SERIES 450 *	TV
Masoneilan 37, 38 series #9, #11 *	MA
Masoneilan 37, 38 series #13 *	MB
Masoneilan 37, 38 Series #13 (w/Side handle)	ME
Masoneilan 37, 38 series #15, #18 *	MC
Masoneilan 37, 38 series #15, #18 (with side manual handle)	MF
Masoneilan type 35002 series Camflex II #41/2, #6, (Valve size 1 inch - 4 inches)	MG
Masoneilan type 35002 Camflex II #7 (Valve size 6 inches - 12 inches)	MH
Masoneilan 37,38 Series #11 *	MJ
Masoneilan 82,83 Series #13 (w/Side handle w/o Side handle)	MK
Masoneilan 82,83 Series #15 *	ML
Masoneilan 82,83 Series #18 *	MM
Fisher 657, 667 series size 40	FB
Fisher 657, 667 series size 45, 50	FC
Fisher 657, 667 series size 60	FD

(8)(9) Mounting bracket for pneumatic actuator	Code
Emerson Valves & Controls Japan (Formerly Kitamura Valve) AK09S,12S,15S	KA
Emerson Valves & Controls Japan (Formerly Kitamura Valve) AG06S, AGN06S	KG
Emerson Valves & Controls Japan (Formerly Kitamura Valve) AG09S, AGN09S	KH
Emerson Valves & Controls Japan (Formerly Kitamura Valve) AG13S, AGN13S	KJ
Emerson Valves & Controls Japan (Formerly Kitamura Valve) AW13S	KV
Emerson Valves & Controls Japan (Formerly Kitamura Valve) AW17S	KW
Emerson Valves & Controls Japan (Formerly Kitamura Valve) AW20S	KT
Emerson Valves & Controls Japan (Formerly Kitamura Valve) AW28S	KD
KITZ B Series BS-2,BSW-2	B2
KITZ B Series BS-3,BSW-3	B3
KITZ B Series BS-4,BSW-4	B4
KITZ B Series BS-5,BSW-5	B5
KITZ B Series BS-6,BSW-6	B6
Emerson(EL-O-MATIC) E25,40,65,100,200,350	RA
Emerson(EL-O-MATIC) E600,950,1600,P2500,P4000	RB
Hisaka Mfg. TS-1	H1
Hisaka Mfg. TS-2	H2
Hisaka Mfg. TS-3	H3
Hisaka Mfg. TS-4,Old type TS-5(Mounting screw M8)	H4
Hisaka Mfg. New TS-5(Mounting screw M10),TS-6	H6
TOMOE Valve Z Series Z-06S,08S,11S,13S	EA
TOMOE Valve T-matic 3Q-1,2,3,4	E3
Nakakita Seisakusho Co. dia. 420, 430, 460, 480	JB

* *Select in the case of without manual handle or with manual handle mounted on top of the actuators.*

Table 3. Mounting bracket for double acting actuator

(8)(9) Mounting bracket for pneumatic actuator	Code
Emerson Valves & Controls Japan (Formerly Kitamura Valve) AK09, AK12, AK15 *	KA
Emerson Valves & Controls Japan (Formerly Kitamura Valve) AG06, AGN06 *	KG
Emerson Valves & Controls Japan (Formerly Kitamura Valve) AG09, AGN09 *	KH
Emerson Valves & Controls Japan (Formerly Kitamura Valve) AG13, AGN13 *	KJ
Emerson Valves & Controls Japan (Formerly Kitamura Valve) AW13 *	KV
Emerson Valves & Controls Japan (Formerly Kitamura Valve) AW17 *	KW
Emerson Valves & Controls Japan (Formerly Kitamura Valve) AW17-HG (w/manual gear handle) *	KB
Emerson Valves & Controls Japan (Formerly Kitamura Valve) AW20 *	KT
Emerson Valves & Controls Japan (Formerly Kitamura Valve) AW20-HG (w/manual gear handle) *	KC
Emerson Valves & Controls Japan (Formerly Kitamura Valve) AW28 *	KD
Emerson Valves & Controls Japan (Formerly Kitamura Valve) AW28-HG (w/manual gear handle) *	KE
KITZ B series B-2 *	B2
KITZ B series B-3 *	B3
KITZ B series B-4 *	B4
KITZ B series B-5 *	B5
KITZ B series B-6 *	B6

(8)(9) Mounting bracket for pneumatic actuator	Code
Emerson (EL-O-MATIC) E25, 40, 65, 100, 200, 350 *	RA
Emerson(EL-O-MATIC) E600,950,1600,P2500,P4000 *	RB
TOMOE Valve Z Series Z-06,08,11,13 *	EA
TOMOE Valve T-matic 3I-1,2,3,4 *	E3
T.V. Valve AT4-80 *	V1
T.V. Valve AT4-100 *	V2
T.V. Valve AT4-120 *	V3
T.V. Valve AT4-150 *	V4
T.V. Valve AT4-180 *	V5
Nihon KOSO AT550,AT600,AT650,AT700 *	TW

* *In case of double acting actuator, a reversing relay unit required.*

Model Number Configuration

Model Selection

Basic model number

AVP200	Analog signal (4-20 mA DC) without travel transmission		(1)	(2)	(3)	(4)	(5)
AVP201	Analog signal (4-20 mA DC) with travel transmission						
AVP202	Analog signal (4-20 mA DC) HART communication protocol						
		(Air pipes, conduit connections)					
(1) Structure	Water-proof	(Rc1/4, G1/2)	X				
	Water-proof	(1/4 NPT, 1/2 NPT)	P				
	TIIS flameproof with one flameproof cable gland *1	(Rc1/4, G1/2)	E				
(2) Finish	Standard (Silver/Dark Gray)			A			
	Corrosion proof (Silver/Dark Gray)			C			
	Standard (Dark Blue) *2			S			
	Corrosion proof (Dark Blue) *2			B			
	Silver finish			D			
(3) Positioner action *4	Direct action - Air pressure increases with control signal increase				D		
	Reverse action - Air pressure decreases with control signal increase				R		
		(pressure gauge range, max. voltage setting of regulator)					
(4) Supply air pressure classification	140 ≤ Ps ≤ 150 kPa	(200 kPa, 400 kPa)				1	
	150 < Ps ≤ 300 kPa	(400 kPa, 400 kPa)				2	
	300 < Ps ≤ 400 kPa	(600 kPa, 400 kPa)				3	
	400 < Ps ≤ 450 kPa	(600 kPa, 700 kPa)				4	
	450 < Ps ≤ 700 kPa	(1000 kPa, 700 kPa)				5	
(5) Scale unit (Pressure gauge)	kPa						A
	(kgf/cm^2) *3						(B)
	MPa						C
	bar						D
	(psi) *3						(E)

*1. *If you need two flameproof cable glands for the AVP201, select option code B.*

*2. *Standard finish is equal to previous Y138A. Corrosion proof is equal to previous Y138B.*

*3. *No domestic sales in Japan due to Non-SI unit.*

*4. *When the input signal (power) is shut off, select direct action to make the output air pressure of this device zero, and reverse action to make the output at the maximum air pressure (supply air pressure).*
Positioner action differs from actuator and control valve action, so be careful in selecting the positioner's action.

		Accessory Selection	-	(6)	(7)	(8)	(9)	-	(10)
(6) Pressure regulator with filter		Without regulator		X					
		Model KZ03 pressure regulator with filter (Mounted on positioner) *1		1					
(7) Cable length		3 m			3				
		5 m			5				
		10 m			T				
		20 m			W				
(8)(9) Actuators (for bracket)		No mounting plate				XX			
	Single-acting actuators	PSA1, PSA2, PSK1				YS			
		New model of PSA3, PSA4 / VA1 to VA3 produced after 2000 *2				YQ			
		Previous model of PSA3, PSA4 for existing valves produced on/before 1999				YY			
		PSA6 / VA4 to VA6 produced after Apr.'83 *2				YL			
		HA1				YA			
		HA2, HA3, HL2, HL3				YT			
		HA4, HL4				YN			
		HK1, VM1 *10 (material SS400 zinc plated)				YK			
		VR1				YV			
		VR2, VR3				YR			
		VR3H				Y6			
		RSA1				YF			
		RSA2				YU			
		GOM83S, GOM84S, GOM103S				YG			
		GOM124S				YM			
		VA1 - VA3 (for old-model motion connectors) produced on/before Apr.'83 800-1, 800-3 *3				YW			
		VA4, VA5 (for old-model motion connectors) produced on/before Apr.'83 800-4, 800-5 *3				YJ			
		Actuators of other manufacturers				See Table 4			
	Double-acting actuators	VP5, 6 *11				Y1			
		SLOP560, 1000, 1000X *11 *12				Y2			
		SLOP1500, 1500X *11 *12				Y3			
		DAP560, 1000, 1000X *11 *12				Y4			
		DAP1500, 1500X *11 *12				Y5			
		GOM44L, 44LM (Springless horizontal) *11				G1			
		GOM410L, 410LM (Springless horizontal) *11				G2			
		GOM64L, 64LM (Springless horizontal) *11				G3			
		GOM66L, 66LM (Springless horizontal) *11				G4			
		GOM610L, 610LM (Springless horizontal) *11				G5			
		GOM84L, 84LM (Springless horizontal) *11				G6			
		GOM86L, 86LM (Springless horizontal) *11				G7			
		GOM810L, 810LM (Springless horizontal) *11				G8			
		GOM1210L, 1210LM (Springless horizontal) *11				GT			
		GOM1510L, 1510LM (Springless horizontal) *11				GU			
		GOM44L, 44LM (Springless horizontal) with restoration feedback lever *11 *13				GE			
		GOM410L, 410LM (Springless horizontal) with restoration feedback lever *11 *13				GF			
		GOM64L, 64LM (Springless horizontal) with restoration feedback lever *11 *13				GG			
		GOM66L, 66LM (Springless horizontal) with restoration feedback lever *11 *13				GH			
		GOM610L, 610LM (Springless horizontal) with restoration feedback lever *11 *13				GJ			
		GOM84L, GOM84LM (Springless horizontal) with restoration feedback lever *11 *13				GK			
		GOM86L, GOM86LM (Springless horizontal) with restoration feedback lever *11 *13				GL			
		GOM810L, GOM810LM (Springless horizontal) with restoration feedback lever *11 *13				GM			
		GOM1210L, GOM1210LM (Springless horizontal) with restoration feedback lever *11 *13				GN			
		GOM1510L, GOM1510LM (Springless horizontal) with restoration feedback lever *11 *13				GP			
		GOM84LM (Springless vertical) *11				GB			
		GOM124LM (Springless vertical) *11				GC			
		Actuators of other manufacturers				See Table 5			
(10) Option		With terminal box for remote cable assembly (This code must be selected.)							M
		Double bearing valve travel detector (This code must be selected.)							L
		Stainless mounting bracket to 2-inch stanchion (This code must be selected.)							U
		HART Communication -20 to +80 °C (This code must be selected for model AVP202)							1
		Universal elbow explosion-proof (SUS304 G½) 1 pc. For model AVP200/202 *4							A
		Flameproof cable gland (G½) 1 pc. (This code can be selected for TIIS flameproof AVP201 models.)							B
		Universal elbow explosion-proof (SUS304 G½) 2 pcs. For model AVP201 *4							C
		Stainless filter for pressure regulator							K
		Filter (Screen for air-exhaust port)							H
		Seal tape prohibited							J
		Mounting bracket for accessories on GOM actuator (in case of replacing GOP) *13							8
		Reversing relay for double acting actuator *14							W

*1. *Select the code "A" or "1" only when the direction of drain of the pressure regulator with filter on the control valve is downward (ground).*
*2. *Select "YW" or "YJ" for old-type motion connectors. (Produced on/before Apr.'83)*
*3. *Consult a sales representative in case of no mounting hole on the side of valve yoke.*
*4. *For TIIS Flameproof model, these elbows should be put on the supplied cable gland. Code "A" and "C" can not be selected simultaneously.*
*10. *In case "VM" type actuator is required following conditions,*
1. select model "VCT" for the body,
2. the existing positioner should be HEP or VPE,
3. yoke should be model HK. If another specification is required, contact your sales representative.
*11. *For the double acting actuator, code "W" of option (10) must be selected.*
*12. *If the valve body is for VFR (FloWing) or a butterfly valve, for the mounting bracket requirement consult to our sales.*
*13. *Select the option with the restoration feedback lever, if GOM manufactured before April, 1988.*
Select the option '8' (Accessory bracket for GOM actuator - Use the case of existing GOP) if the existing control valve assembled with GOP and the accessories such as the Lock-up valves and solenoid valves.
*14 *If reverse action is selected for positioner action, this option cannot be selected.*

Table 4. Mounting bracket for single acting actuator

(8)(9) Mounting bracket for pneumatic actuator	Code
Motoyama Mfg. 2800 series 240, 280, 330, NIHON KOSO A100 series 270, 320 *2	TA
Motoyama Mfg. 2800 series 400, 500S, 500L, NIHON KOSO A100 series 400, 500 *2	TB
Motoyama Mfg. 2800 series 650S, 650L	TC
Motoyama Mfg. 2800 series 240, 280, 330 (with side manual)	TD
Motoyama Mfg. 2800 series 400, 500S, 500L (with side manual)	TE
Motoyama Mfg. 2800 series 650S, 650L (with side manual)	TF
Motoyama Mfg. 3800 series (multi-spring type) N24, N28, N33S *2	TJ
Motoyama Mfg. 2922 series (Gyrol-I) G.R.I 280H, 330H, 400HS, 400H, 500H *3	TL
Motoyama Mfg. 3993 series (Gyrol-II) 2911-1M series 280, 330, 400 *3	TG
Masoneilan 37, 38 series #9, #11 *2	MA
Masoneilan 37, 38 series #13 *2	MB
Masoneilan 37, 38 series #15, #18 *2	MC
Masoneilan 37, 38 series #15, #18 (with side manual)	MF
Masoneilan type 35002 series Camflex II #4-1/2, #6, #7 *3	MG
NIHON KOSO TC-500 series TC520S *3	TP

(8)(9) Mounting bracket for pneumatic actuator	Code
NIHON KOSO TC-700 series TC-713S *3	TS
NIHON KOSO TC-700 series TC-722SS *3	TT
Pentair Valve and Control Japan AK05, AK09S, AK12S, AK15S *3	KA
Pentair Valve and Control Japan AG06S, AGN06S *3	KG
Pentair Valve and Control Japan AG09S, AGN09S *3	KH
Pentair Valve and Control Japan AG13S, AGN13S *3	KJ
Pentair Valve and Control Japan AW13S *3	KV
Pentair Valve and Control Japan AW17S *3	KW
Tomoe Valve Z series Z-06S, 08S, 11S, 13S *3	EA
Tomoe Valve T-matic 3Q-1, 2, 3, 4 *3	E3
Fisher 657, 667 series size 45, 50	FC
Fisher 657, 667 series size 60	FD
Nakakita Seisakusho Co. 410DA, 465 RB	JB

**1 If no suitable mounting bracket can be found, contact a sales representative.*
**2 Select in the case of without manual handle or with manual handle mounted on top of the actuators.*
**3 Anti-abrasion feedback structure.*

Table 5. Mounting bracket for double acting actuator

(8)(9) Mounting bracket for pneumatic actuator		Code
NIHON KOSO 6300 series 63A2, AT series AT20	*1*3	T2
NIHON KOSO 6300 series 63A3, B2, BA, B3, BB, B5, AT series AT-30, 200, 250, 300, 350, 500	*1*3	T3
NIHON KOSO 6300 series 63A4, A5, A6, AT series AT40, AT50, AT60	*1*3	T4
NIHON KOSO 6300 series AT series AT25	*1*3	T5
NIHON KOSO TC-500 series TC-520W	*1 *2*3	TP
NIHON KOSO TC-700 series TC-713W	*1*3	TS
EMERSON Valve and Control Japan AK09, AK12, AK15	*1*3	KA
EMERSON Valve and Control Japan AG06, AGN06	*1*3	KG
EMERSON Valve and Control Japan AG09, AGN09	*1*3	KH
EMERSON Valve and Control Japan AG13, AGN13	*1*3	KJ
EMERSON Valve and Control Japan AW13	*1*3	KV
EMERSON Valve and Control Japan AW17	*1*3	KW
EMERSON Valve and Control Japan AW20	*1	KT
KITZ B series B-2*3	*1*3	B2
KITZ B series B-3*3	*1*3	B3
KITZ B series B-4*3	*1*3	B4
KITZ B series B-5*3	*1*3	B5
KITZ B series B-6*3	*1*3	B6
EMERSON (EL-O-MATIC) E25, 40, 65, 100, 200, 350	*1	RA
EMERSON (EL-O-MATIC) E600, 950, 1600, P2500, P4000	*1	RB
Tomoe Valve Z series Z-06, 08, 11, 13*3	*1*3	EA
Tomoe Valve T-matic 3I-1, 2, 3, 4*3	*1*3	E3
T. V. VALVE AT4-80	*1	V1
T. V. VALVE AT4-100	*1	V2
T. V. VALVE AT4-120	*1	V3
T. V. VALVE AT4-150	*1	V4
T. V. VALVE AT4-180	*1	V5

**1 For the double acting actuator, a reversing relay unit required.*
**2 Confirm that boss's pitch of the actuator side is 69 mm, if it is required to assemble the mounting bracket to the actuator.*
**3 Anti-abrasion feedback structure.*

Table 6. Standard travel range and accuracy

Actuator	Travel (mm)	accuracy [% F.S.]
PSA1, 2	14.3, 20, 25	1
PSA3, 4	20, 38	1
HA1	6, 8, 10	3
	14.3, 25	1
HA2	10	3
	14.3, 25, 38	1
HA3	14.3	3
	25, 38, 50	1
HA4	14.3	3
	25, 38, 50, 75	1
VA5	25, 37.5, 50, 75, 100	1
VA6	14.3	3
PSA6, 7	25, 37.5, 50, 75, 100	1
HK1	10	3
PSK1	19	1
DAP560, 1000 1000X	14.3	3.0
	25 ~ 100	1.0
DAP1500, 1500X	14.3, 25	3.0
	38 ~ 100	1.0

Dimensions (Model AVP300/301/302)

DIMENSIONS

For single acting actuator without pressure regulator

[Unit: mm]

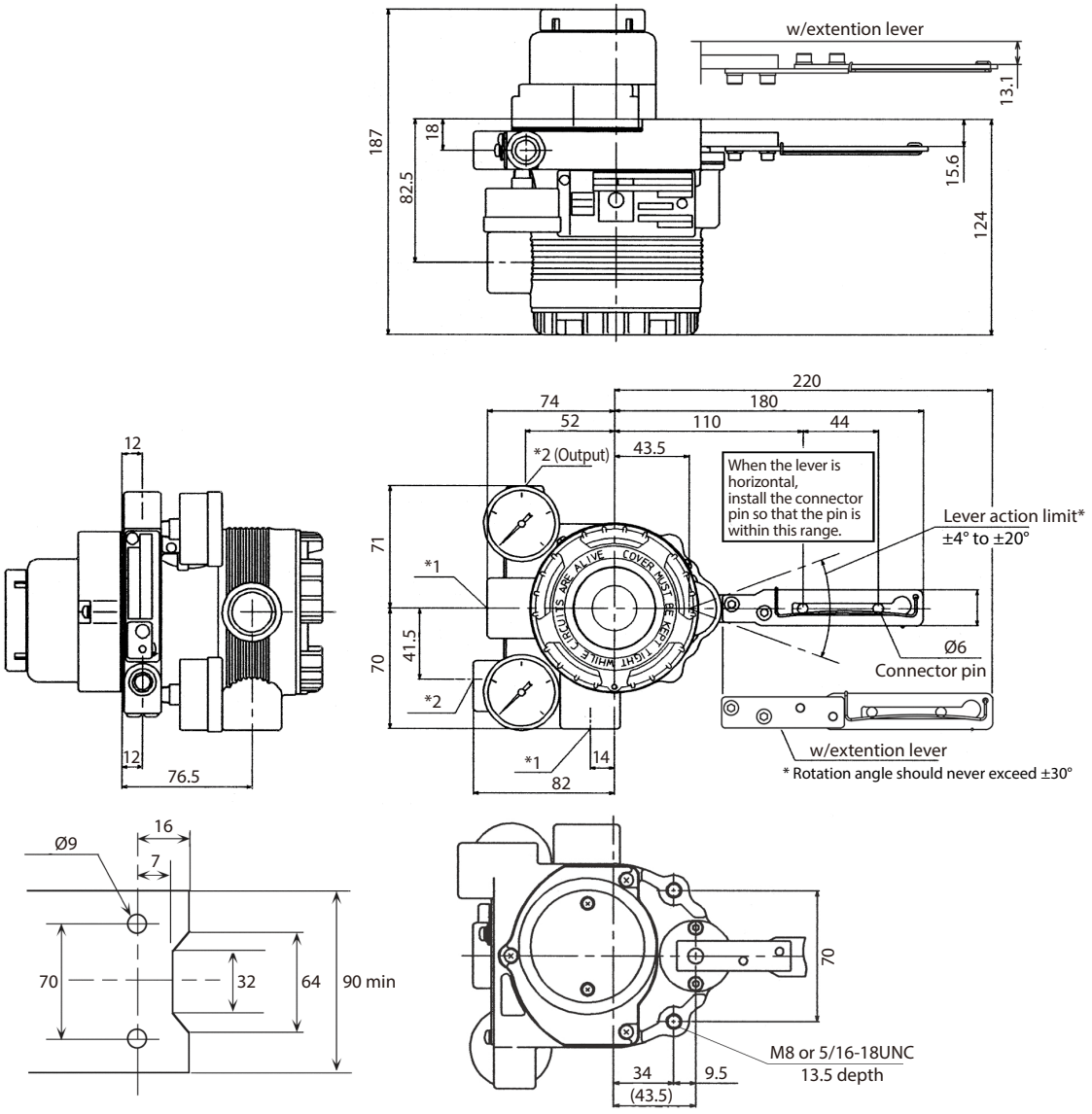

Mounting plate reference dimension

Electrical connection *1	Air piping connection *2
G1/2	Rc1/4
1/2NPT	1/4NPT
M20×1.5	1/4NPT

Terminal connections

Terminal screw size M4

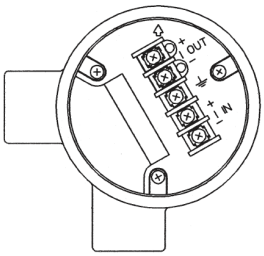

Extension lever	Actuator model	Code
No	PSA1, 2, PSK1	YS
	HA1	YA
	HA2, 3	YT
	HK1	YK
Yes	PSA3, 4 VA1 to 3	YQ
	PSA6	YL
	PSA7	Y8
	HA4	YN
	VA4 to 6	YL
	VR1	YV
	VR2, 3	YR
	GOM83S, 84S, 103S	YG
	GOM124S	YM

For single acting actuator with pressure regulator model RA1B

[Unit: mm]

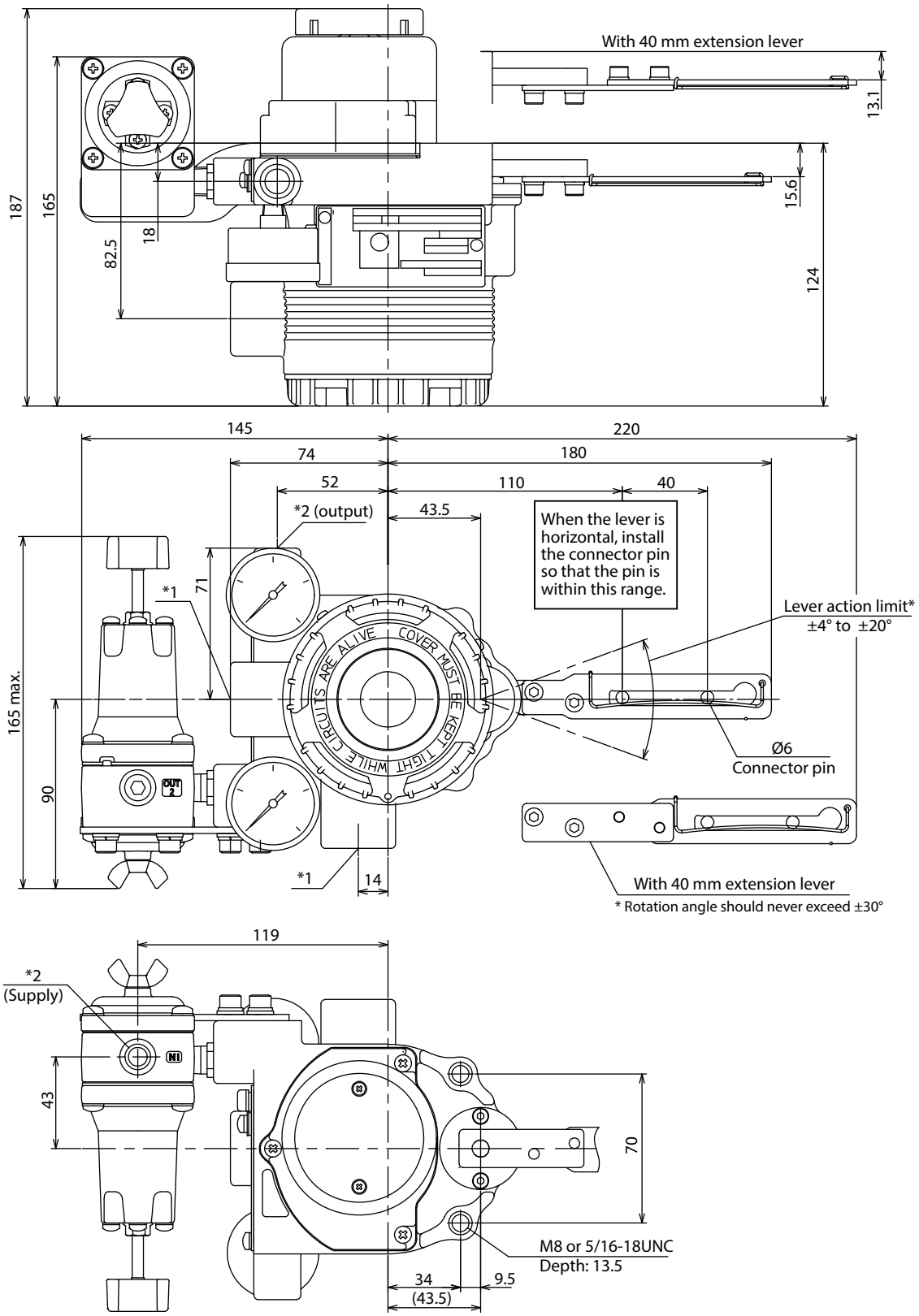

Electrical connection *1	Air piping connection *2
G1/2	Rc1/4
1/2NPT	1/4NPT
M20×1.5	1/4NPT

For single acting actuator with pressure regulator model KZ03

[Unit: mm]

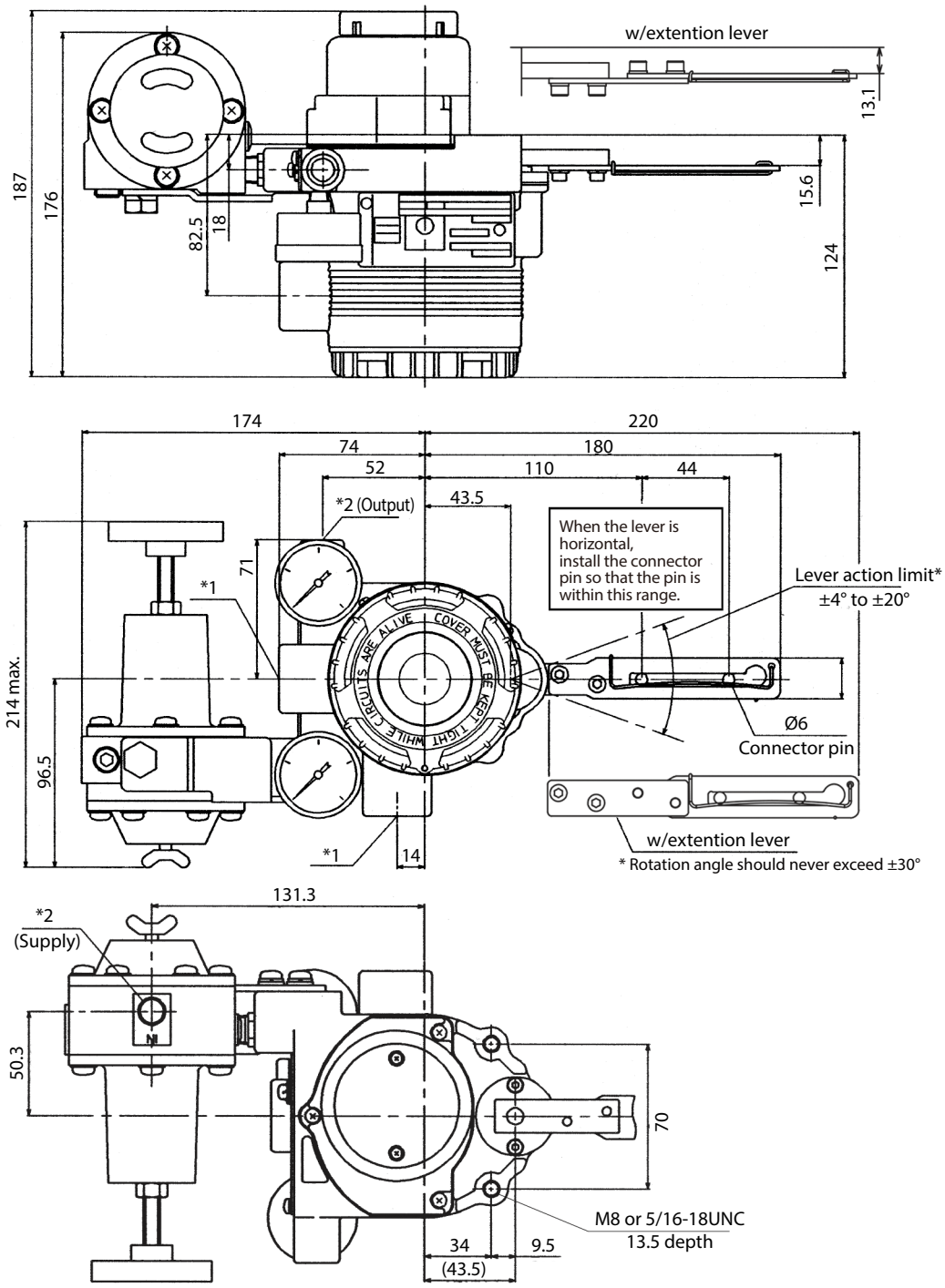

Electrical connection *1	Air piping connection *2
G1/2	Rc1/4
1/2NPT	1/4NPT
M20×1.5	1/4NPT

For double acting actuator with reversing-relay

[Unit: mm]

Without pressure regulator

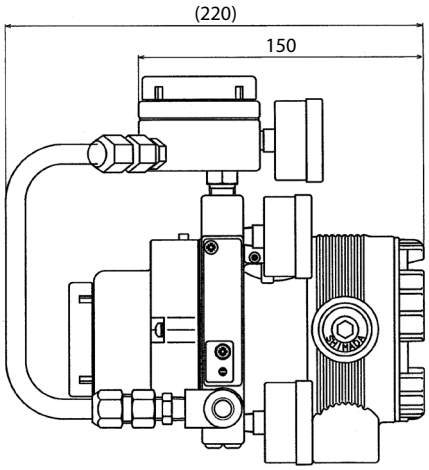

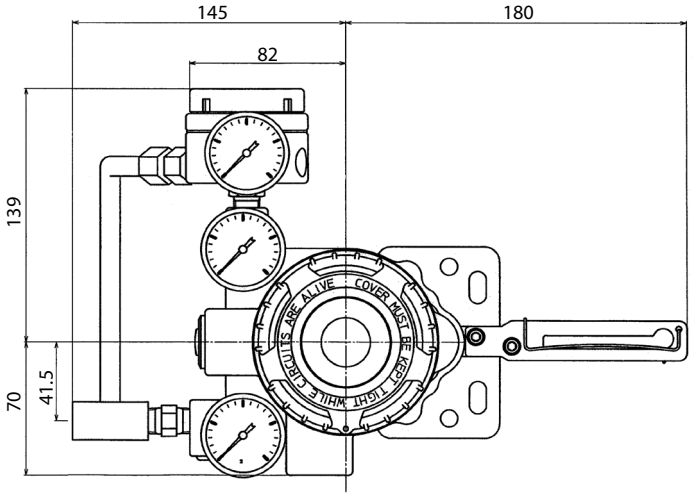

With pressure regulator model RA1B

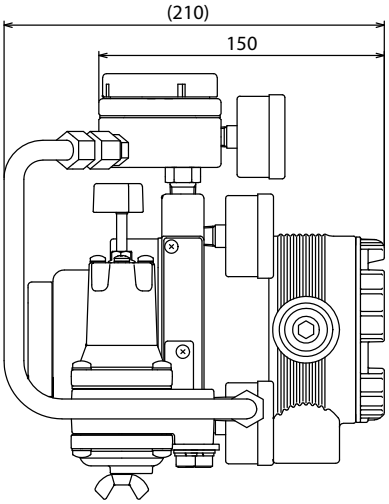

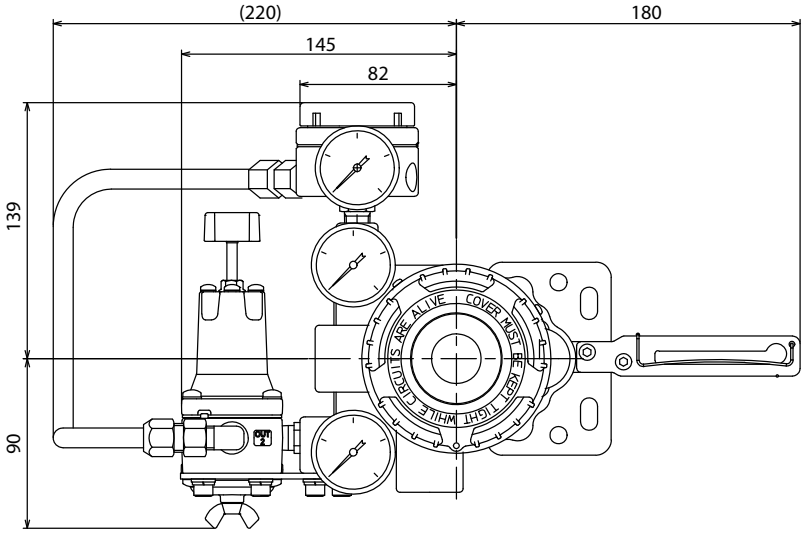

With pressure regulator model KZ03

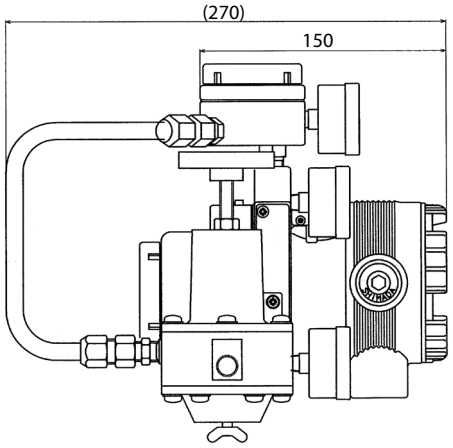

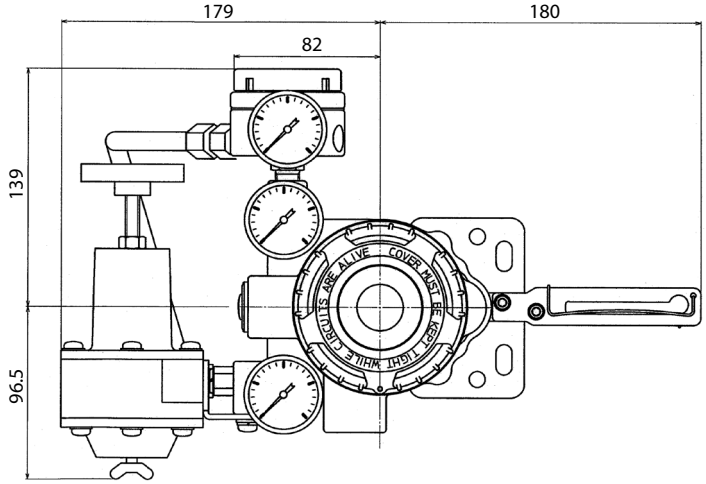

Dimensions (Model AVP200/201/202)

For single acting actuator without pressure regulator

[Unit: mm]

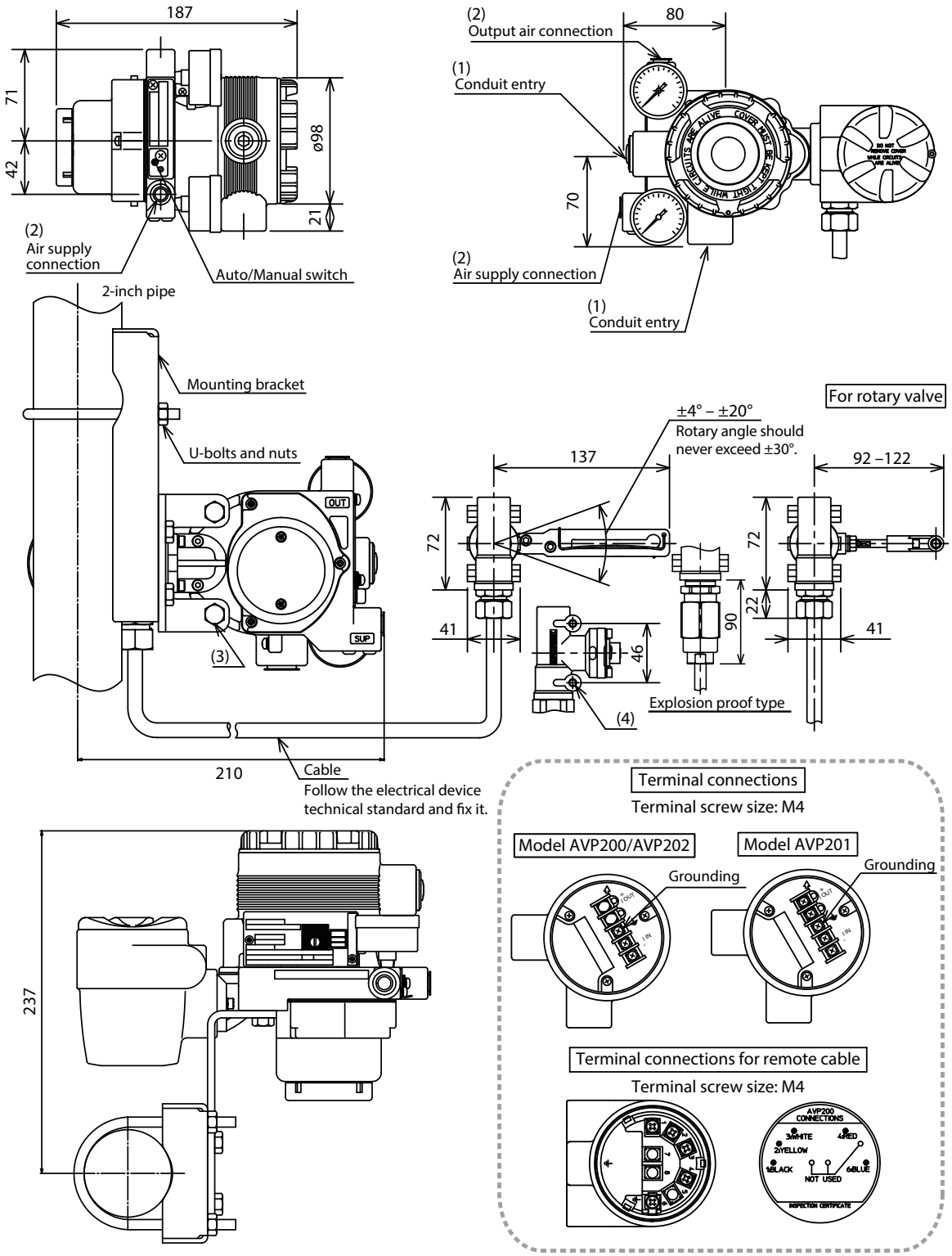

Type	Electrical connection	Air piping connection	Mounting thread	
			AVP body	Valve travel detector
Water-proof / TIIS Flameproof	G1/2	Rc1/4	M8	M6
Water-proof	1/2NPT	1/4NPT	5/16-18UNC	1/4-20UNC
Parts on drawings	(1)	(2)	(3)	(4)

For single acting actuator with pressure regulator

With pressure regulator model RA1B

[Unit: mm]

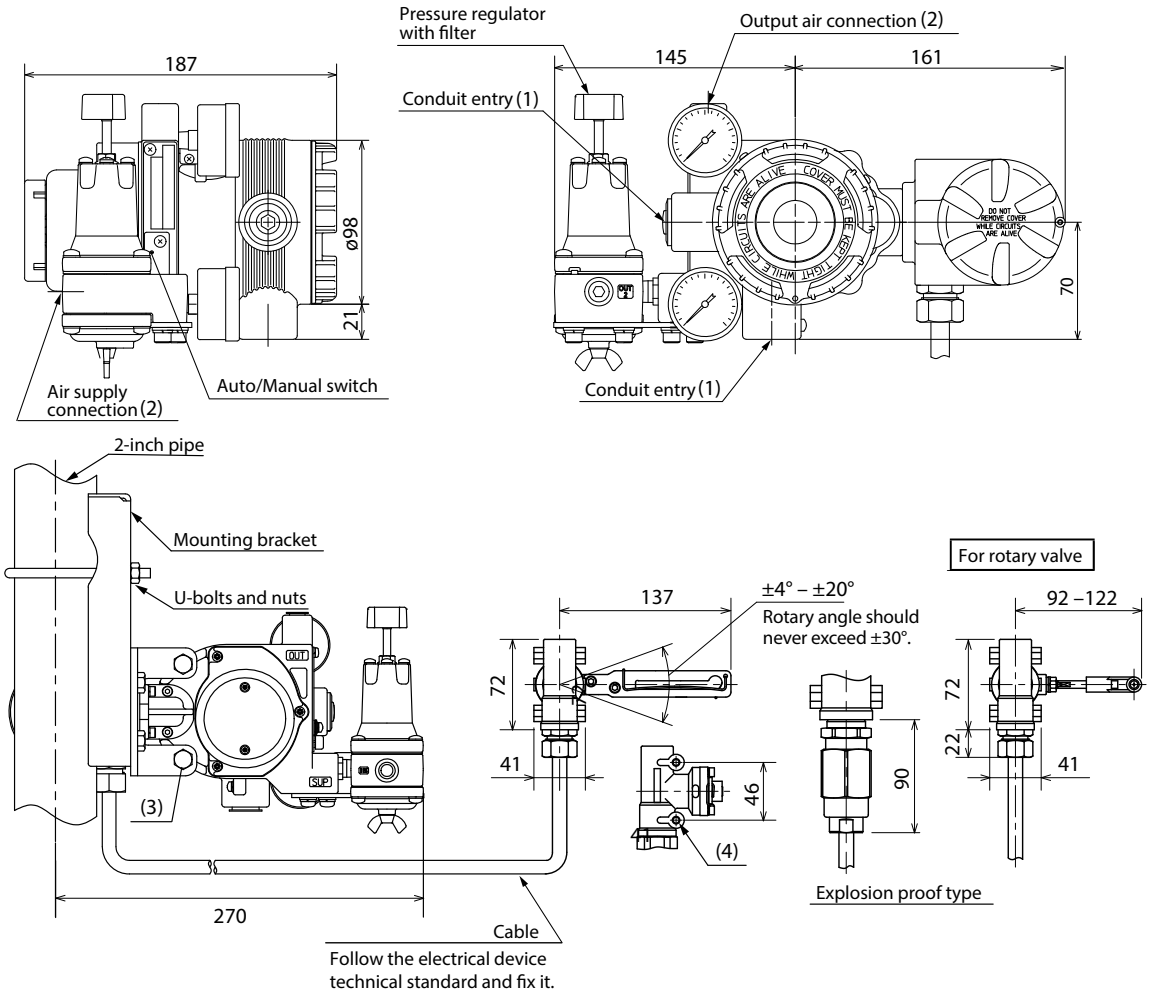

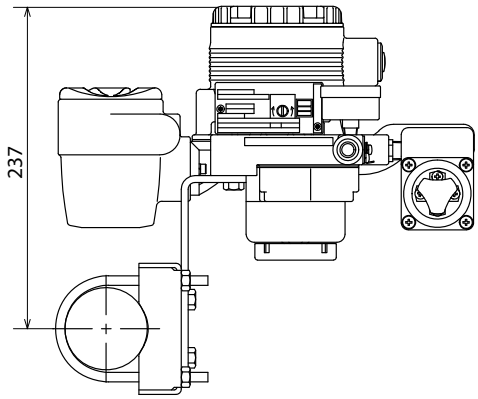

Type	Electrical connection	Air piping connection	Mounting thread	
			AVP body	Valve travel detector
Water-proof / TIIS Flameproof	G1/2	Rc1/4	M8	M6
Water-proof	1/2NPT	1/4NPT	5/16-18UNC	1/4-20UNC
Parts on drawings	(1)	(2)	(3)	(4)

For single acting actuator with pressure regulator

With pressure regulator model KZ03

[Unit: mm]

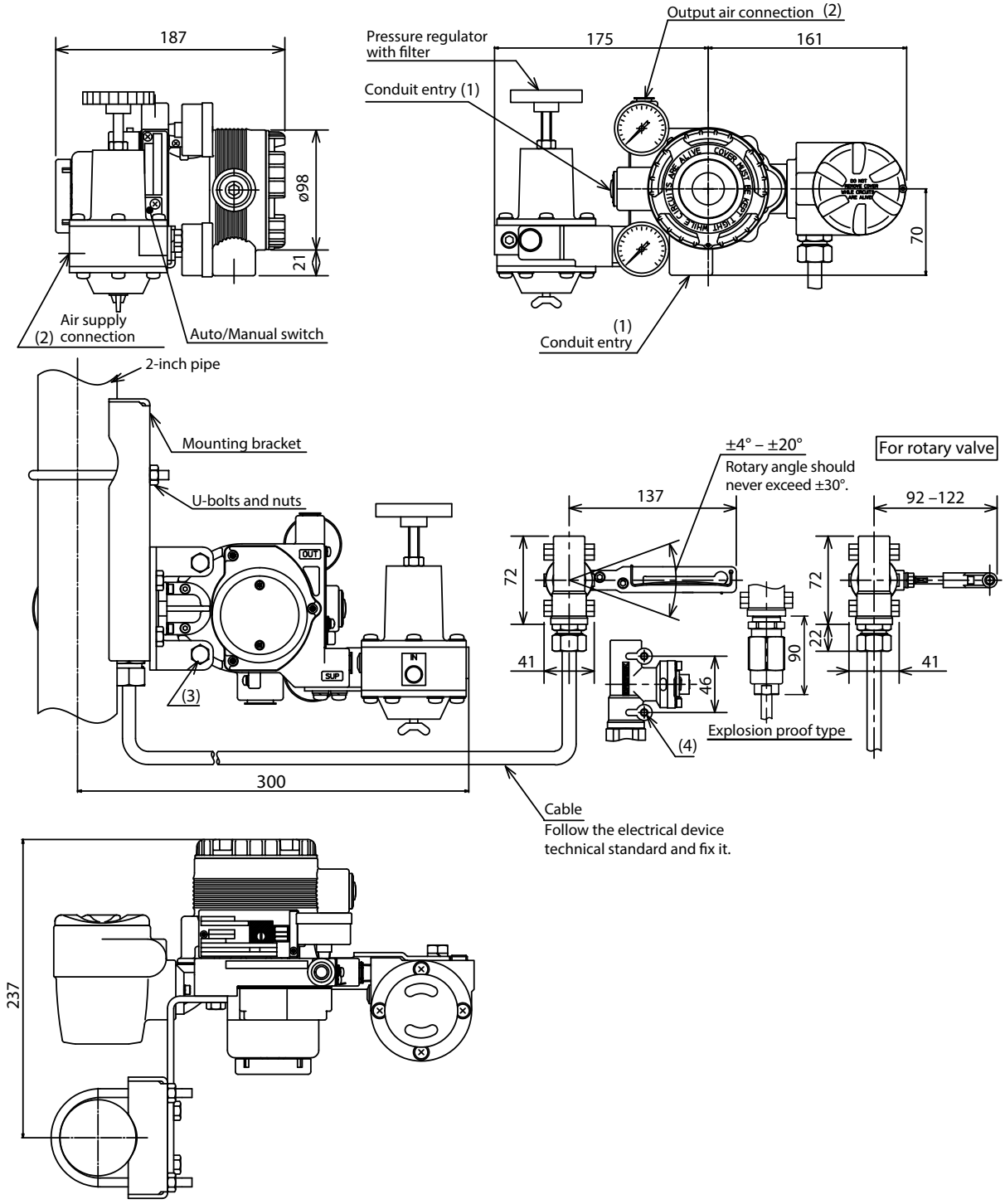

Type	Electrical connection	Air piping connection	Mounting thread	
			AVP body	Valve travel detector
Water-proof / TIIS Flameproof	G1/2	Rc1/4	M8	M6
Water-proof	1/2NPT	1/4NPT	5/16-18UNC	1/4-20UNC
Parts on drawings	(1)	(2)	(3)	(4)

For double acting actuator with reversing-relay

Without pressure regulator

[Unit: mm]

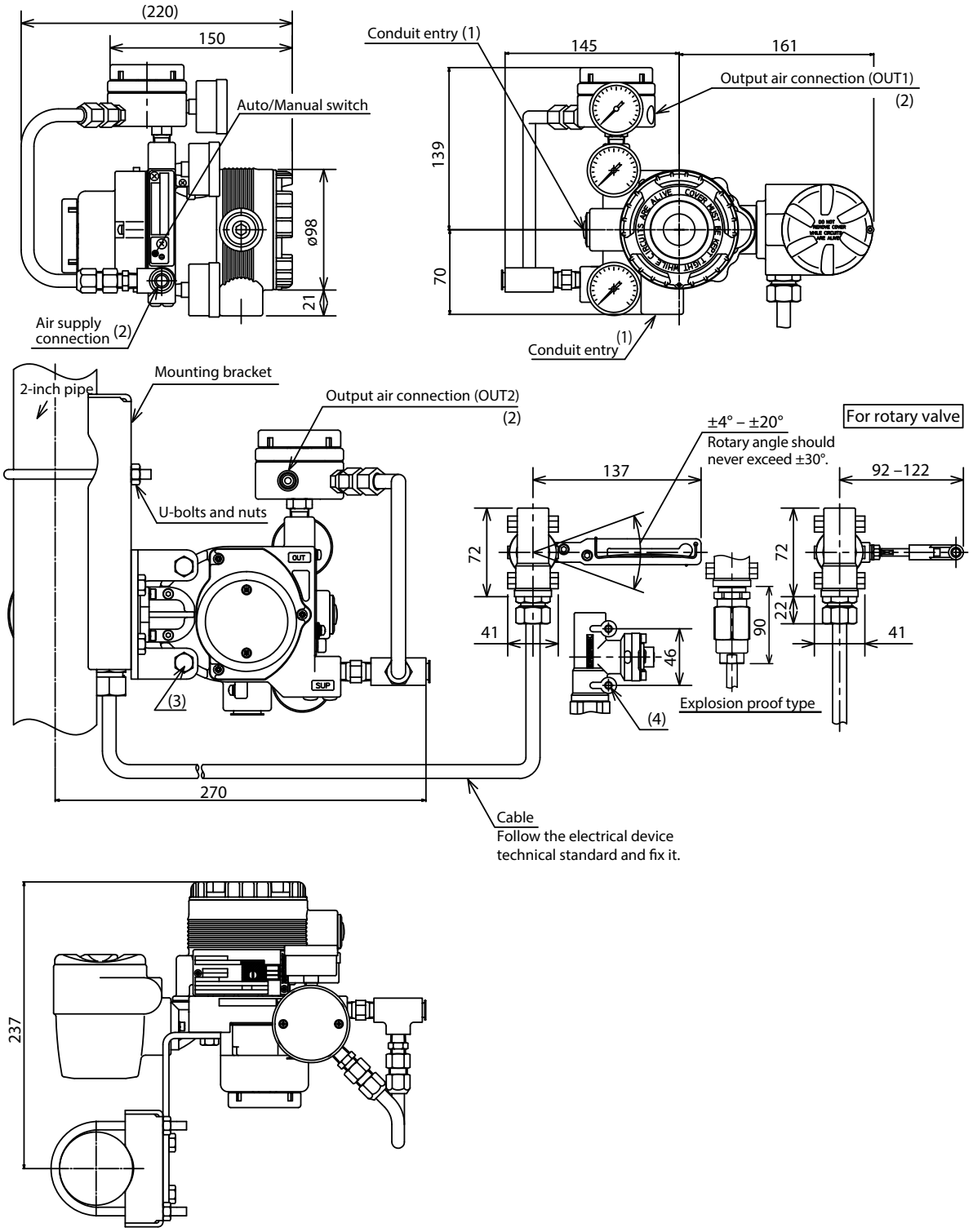

Type	Electrical connection	Air piping connection	Mounting thread	
			AVP body	Valve travel detector
Water-proof / TIIS Flameproof	G1/2	Rc1/4	M8	M6
Water-proof	1/2NPT	1/4NPT	5/16-18UNC	1/4-20UNC
Parts on drawings	(1)	(2)	(3)	(4)

For double acting actuator with reversing-relay

With pressure regulator model RA1B

[Unit: mm]

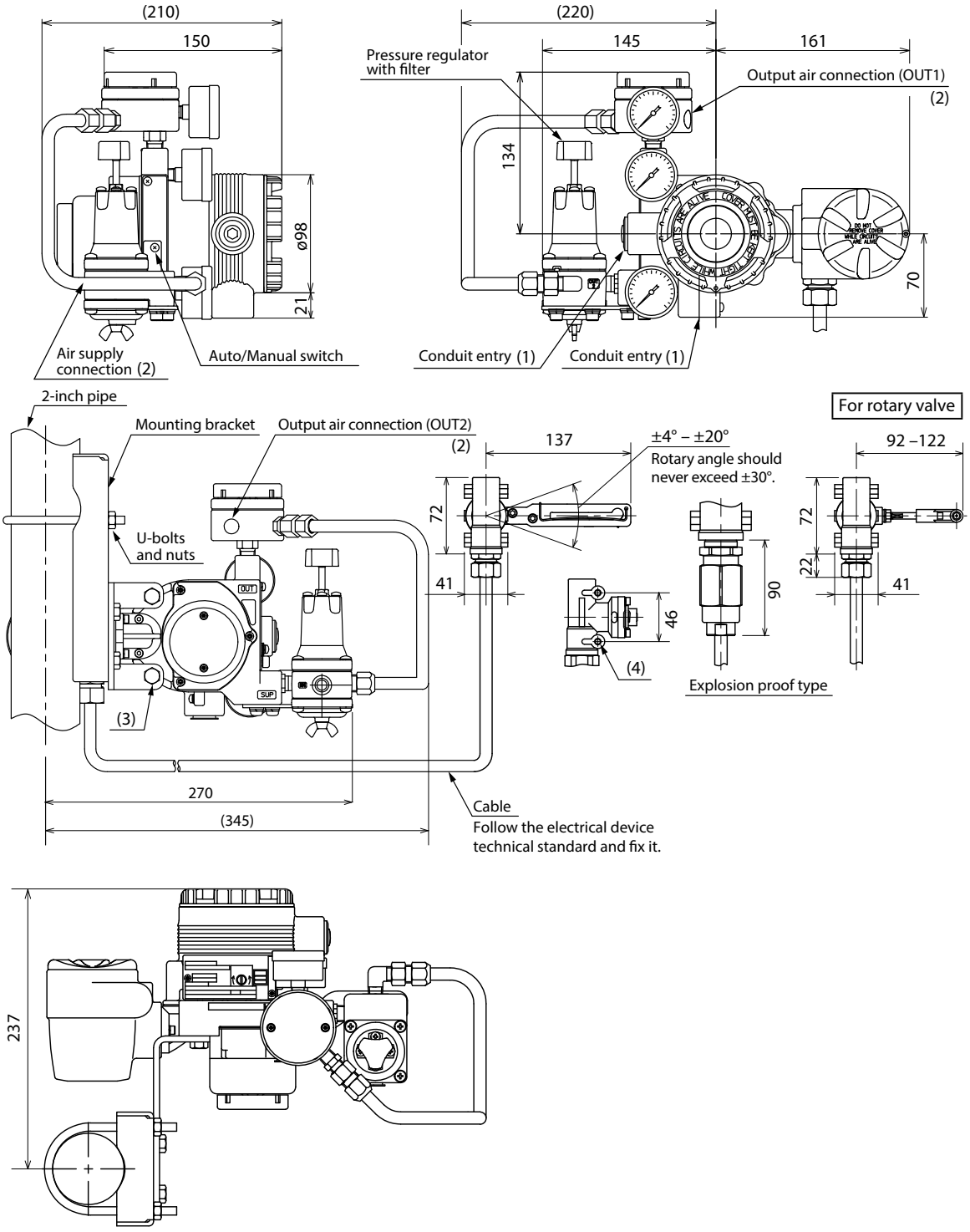

Type	Electrical connection	Air piping connection	Mounting thread	
			AVP body	Valve travel detector
Water-proof / TIIS Flameproof	G1/2	Rc1/4	M8	M6
Water-proof	1/2NPT	1/4NPT	5/16-18UNC	1/4-20UNC
Parts on drawings	(1)	(2)	(3)	(4)

For double acting actuator with reversing-relay

With pressure regulator model KZ03

[Unit: mm]

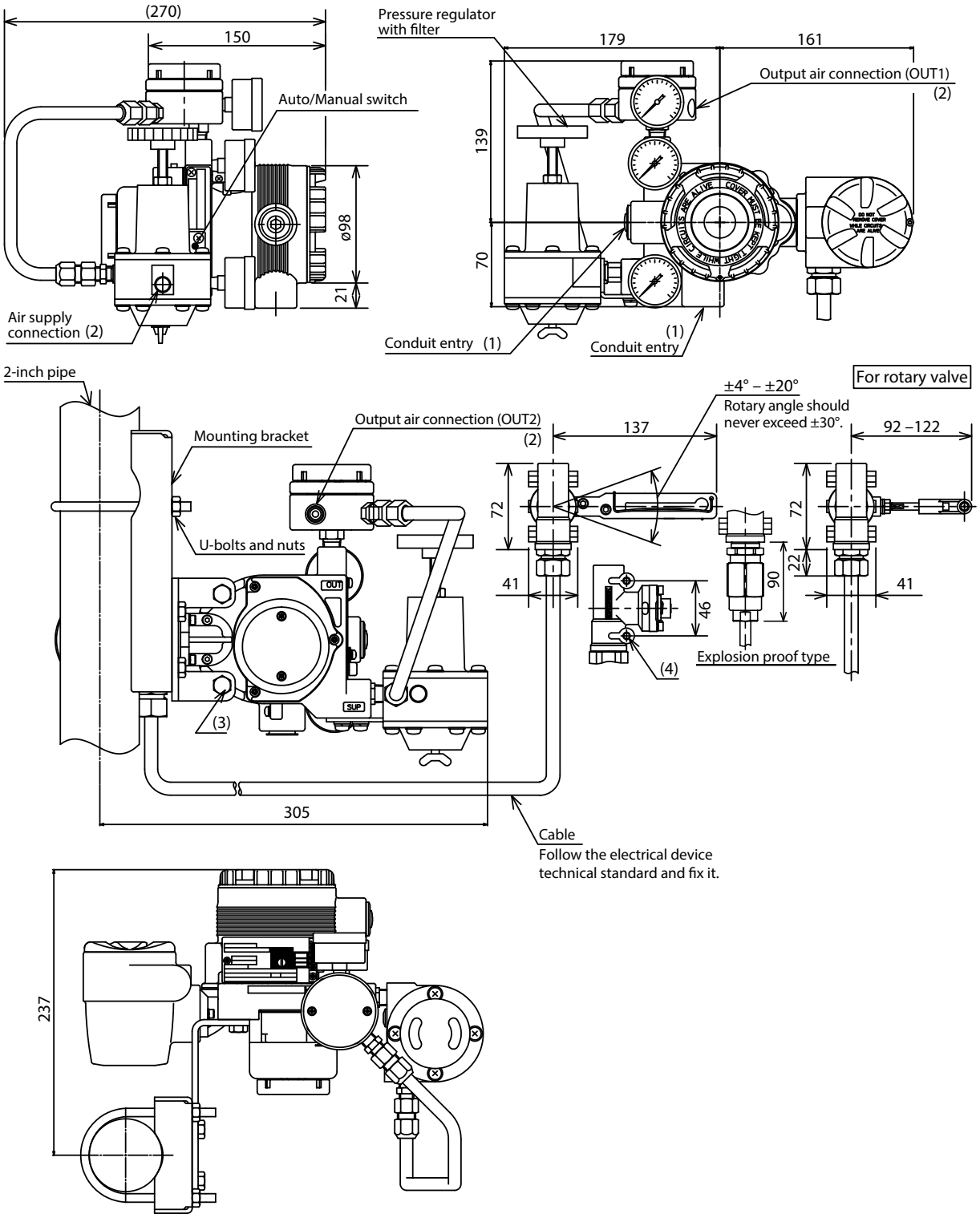

Type	Electrical connection	Air piping connection	Mounting thread	
			AVP body	Valve travel detector
Water-proof / TIIS Flameproof	G1/2	Rc1/4	M8	M6
Water-proof	1/2NPT	1/4NPT	5/16-18UNC	1/4-20UNC
Parts on drawings	(1)	(2)	(3)	(4)

For rotary valve actuator

[Unit: mm]

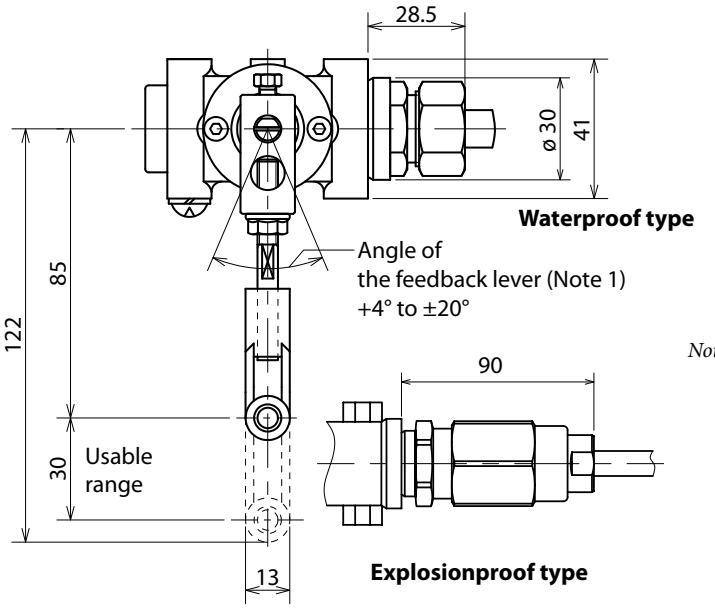

Note 1. Rotary angle should never exceed ±30°.

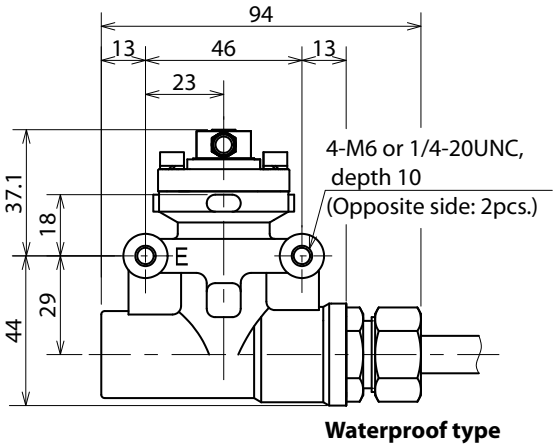

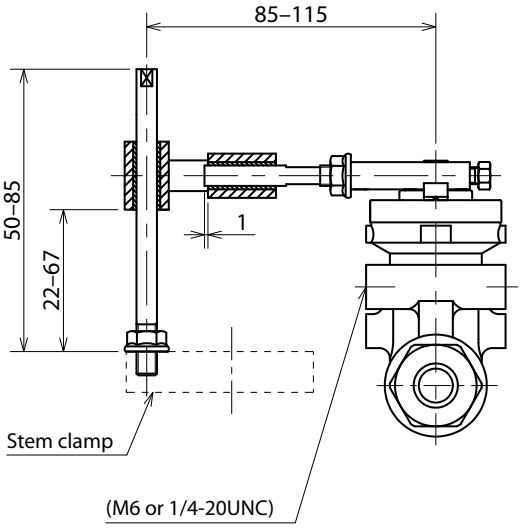

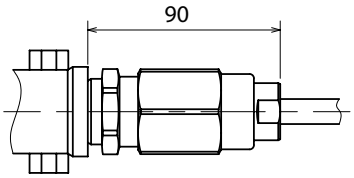

Explosionproof type

Terms and Conditions

We would like to express our appreciation for your purchase and use of Azbil Corporation's products.

You are required to acknowledge and agree upon the following terms and conditions for your purchase of Azbil Corporation's products (system products, field instruments, control valves, and control products), unless otherwise stated in any separate document, including, without limitation, estimation sheets, written agreements, catalogs, specifications and instruction manuals.

1. Warranty period and warranty scope

1.1 Warranty period

Azbil Corporation's products shall be warranted for one (1) year from the date of your purchase of the said products or the delivery of the said products to a place designated by you.

1.2 Warranty scope

In the event that Azbil Corporation's product has any failure attributable to azbil during the aforementioned warranty period, Azbil Corporation shall, without charge, deliver a replacement for the said product to the place where you purchased, or repair the said product and deliver it to the aforementioned place. Notwithstanding the foregoing, any failure falling under one of the following shall not be covered under this warranty:

(1) Failure caused by your improper use of azbil product (noncompliance with conditions, environment of use, precautions, etc. set forth in catalogs, specifications, instruction manuals, etc.);
(2) Failure caused for other reasons than Azbil Corporation's product;
(3) Failure caused by any modification or repair made by any person other than Azbil Corporation or Azbil Corporation's subcontractors;
(4) Failure caused by your use of Azbil Corporation's product in a manner not conforming to the intended usage of that product;
(5) Failure that the state-of-the-art at the time of Azbil Corporation's shipment did not allow Azbil Corporation to predict; or
(6) Failure that arose from any reason not attributable to Azbil Corporation, including, without limitation, acts of God, disasters, and actions taken by a third party.

Please note that the term "warranty" as used herein refers to equipment-only-warranty, and Azbil Corporation shall not be liable for any damages, including direct, indirect, special, incidental or consequential damages in connection with or arising out of Azbil Corporation's products.

2. Ascertainment of suitability

You are required to ascertain the suitability of Azbil Corporation's product in case of your use of the same with your machinery, equipment, etc. (hereinafter referred to as "Equipment") on your own responsibility, taking the following matters into consideration:

(1) Regulations and standards or laws that your Equipment is to comply with.
(2) Examples of application described in any documents provided by Azbil Corporation are for your reference purpose only, and you are required to check the functions and safety of your Equipment prior to your use.
(3) Measures to be taken to secure the required level of the reliability and safety of your Equipment in your use
Although azbil is constantly making efforts to improve the quality and reliability of Azbil Corporation's products, there exists a possibility that parts and machinery may break down. You are required to provide your Equipment with safety design such as fool-proof design,*1 and fail-safe design*2 (anti-flame propagation design, etc.), whereby preventing any occurrence of physical injuries, fires, significant damage, and so forth. Furthermore, fault avoidance,*3 fault tolerance,*4 or the like should be incorporated so that the said Equipment can satisfy the level of reliability and safety required for your use.

*1. A design that is safe even if the user makes an error.
*2. A design that is safe even if the device fails.
*3. Avoidance of device failure by using highly reliable components, etc.
*4. The use of redundancy.

3. Precautions and restrictions on application

3.1 Restrictions on application

Please follow the table below for use in nuclear power or radiation-related equipment.

	Nuclear power quality*5 required	Nuclear power quality*5 not required
Within a radiation controlled area*6	Cannot be used (except for limit switches for nuclear power*7)	Cannot be used (except for limit switches for nuclear power*7)
Outside a radiation controlled area*6	Cannot be used (except for limit switches for nuclear power*7)	Can be used

*5. Nuclear power quality: compliance with JEAG 4121 required
*6. Radiation controlled area: an area governed by the requirements of article 3 of "Rules on the Prevention of Harm from Ionizing Radiation," article 2 2 4 of "Regulations on Installation and Operation of Nuclear Reactors for Practical Power Generation," article 4 of "Determining the Quantity, etc., of Radiation-Emitting Isotopes,"etc.
*7. Limit switch for nuclear power: a limit switch designed, manufactured and sold according to IEEE 382 and JEAG 4121.

Any Azbil Corporation's products shall not be used for/with medical equipment.

The products are for industrial use. Do not allow general consumers to install or use any Azbil Corporation's product. However, azbil products can be incorporated into products used by general consumers. If you intend to use a product for that purpose, please contact one of our sales representatives.

3.2 Precautions on application

you are required to conduct a consultation with our sales representative and understand detail specifications, cautions for operation, and so forth by reference to catalogs, specifications, instruction manual, etc. in case that you intend to use azbil product for any purposes specified in (1) through (6) below. Moreover, you are required to provide your Equipment with fool-proof design, fail-safe design, anti-flame propagation design, fault avoidance, fault tolerance, and other kinds of protection/safety circuit design on your own responsibility to ensure reliability and safety, whereby preventing problems caused by failure or nonconformity.

(1) For use under such conditions or in such environments as not stated in technical documents, including catalogs, specification, and instruction manuals
(2) For use of specific purposes, such as:
    * Nuclear energy/radiation related facilities
      [When used outside a radiation controlled area and where nuclear power quality is not required]
      [When the limit switch for nuclear power is used]
    * Machinery or equipment for space/sea bottom
    * Transportation equipment
      [Railway, aircraft, vessels, vehicle equipment, etc.]
    * Antidisaster/crime-prevention equipment
    * Burning appliances
    * Electrothermal equipment
    * Amusement facilities
    * Facilities/applications associated directly with billing
(3) Supply systems such as electricity/gas/water supply systems, large-scale communication systems, and traffic/air traffic control systems requiring high reliability
(4) Facilities that are to comply with regulations of governmental/public agencies or specific industries
(5) Machinery or equipment that may affect human lives, human bodies or properties
(6) Other machinery or equipment equivalent to those set forth in items (1) to (5) above which require high reliability and safety

4. Precautions against long-term use

Use of Azbil Corporation's products, including switches, which contain electronic components, over a prolonged period may degrade insulation or increase contact-resistance and may result in heat generation or any other similar problem causing such product or switch to develop safety hazards such as smoking, ignition, and electrification. Although acceleration of the above situation varies depending on the conditions or environment of use of the products, you are required not to use any Azbil Corporation's products for a period exceeding ten (10) years unless otherwise stated in specifications or instruction manuals.

5. Recommendation for renewal

Mechanical components, such as relays and switches, used for Azbil Corporation's products will reach the end of their life due to wear by repetitious open/close operations.

In addition, electronic components such as electrolytic capacitors will reach the end of their life due to aged deterioration based on the conditions or environment in which such electronic components are used. Although acceleration of the above situation varies depending on the conditions or environment of use, the number of open/close operations of relays, etc. as prescribed in specifications or instruction manuals, or depending on the design margin of your machine or equipment, you are required to renew any Azbil Corporation's products every 5 to 10 years unless otherwise specified in specifications or instruction manuals. System products, field instruments (sensors such as pressure/flow/level sensors, regulating valves, etc.) will reach the end of their life due to aged deterioration of parts. For those parts that will reach the end of their life due to aged deterioration, recommended replacement cycles are prescribed. You are required to replace parts based on such recommended replacement cycles.

6. Other precautions

Prior to your use of Azbil Corporation's products, you are required to understand and comply with specifications (e.g., conditions and environment of use), precautions, warnings/cautions/notices as set forth in the technical documents prepared for individual Azbil Corporation's products, such as catalogs, specifications, and instruction manuals to ensure the quality, reliability, and safety of those products.

7. Changes to specifications

Please note that the descriptions contained in any documents provided by azbil are subject to change without notice for improvement or for any other reason. For inquires or information on specifications as you may need to check, please contact our branch offices or sales offices, or your local sales agents.

8. Discontinuance of the supply of products/parts

Please note that the production of any Azbil Corporation's product may be discontinued without notice. After manufacturing is discontinued, we may not be able to provide replacement products even within the warranty period.

For repairable products, we will, in principle, undertake repairs for five (5) years after the discontinuance of those products. In some cases, however, we cannot undertake such repairs for reasons, such as the absence of repair parts. For system products, field instruments, we may not be able to undertake parts replacement for similar reasons.

9. Scope of services

Prices of Azbil Corporation's products do not include any charges for services such as engineer dispatch service. Accordingly, a separate fee will be charged in any of the following cases:

(1) Installation, adjustment, guidance, and attendance at a test run
(2) Maintenance, inspection, adjustment, and repair
(3) Technical guidance and technical education
(4) Special test or special inspection of a product under the conditions specified by you

Please note that we cannot provide any services as set forth above in a nuclear energy controlled area (radiation controlled area) or at a place where the level of exposure to radiation is equivalent to that in a nuclear energy controlled area.

Document Number:	CM2-AVP300-2001
Document Name:	Smart Valve Positioner 300 Series Model AVP300/AVP301/AVP302 (Integral Type) 200 Series Model AVP200/AVP201/AVP202 (Remote Type) User's Manual
Date:	1st edition: Oct. 1998 42th edition: Apr. 2025
Issued/Edited by:	Azbil Corporation

Azbil Corporation